EASY ROOF METAL

BUILDING INTEGRATED PV SYSTEM

ASSEMBLY INSTRUCTIONS

INS-IN02-21-0870 – version 1.5 du 02/12/2022

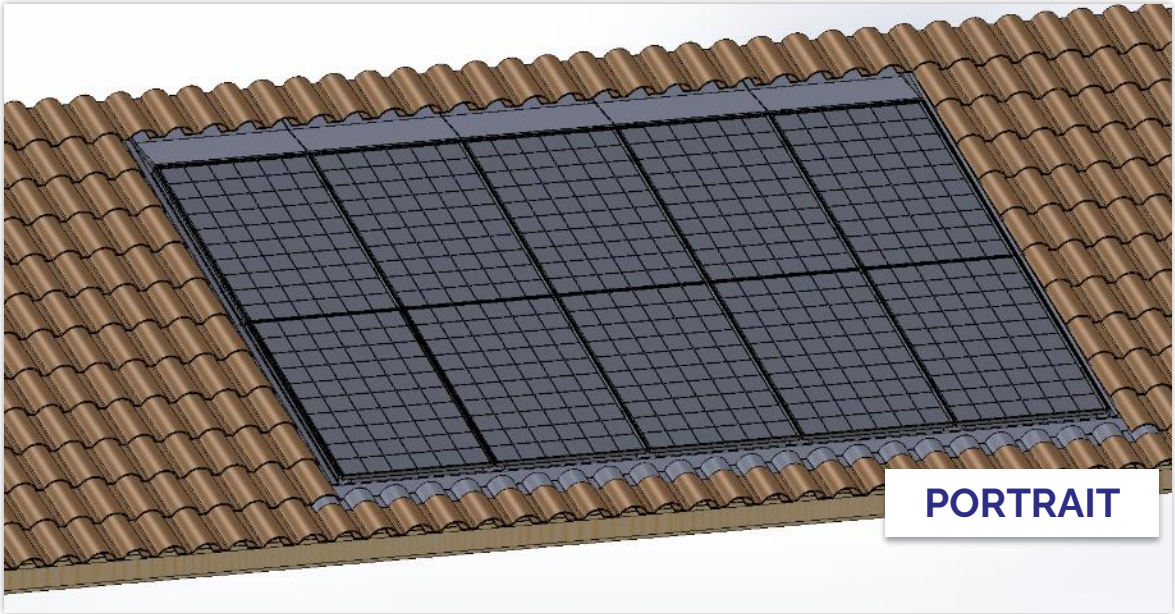

Document validated by ENQUETE TECHNIQUE NOUVELLE
No. L21.05906a

The EASY ROOF METAL system is insured within the framework defined by the ETN

Contents

Contents

User advice sheet :
Use, maintenance and repairs

SMQ-F0-13-180724

Congratulations, you have become the proud owner of an EASY ROOF METAL system !

With EASY ROOF METAL you have chosen a practical, reliable and aesthetic solution for your roof photovoltaic project.

For an optimal use of the system , please read and keep the following cleaning and maintenance instructions :

All photovoltaic systems must be regularly monitored and cleaned. To this end, your installer can provide you with a maintenance contract. If you are interested please ask them for details.

All maintenance and repair operations on IRFTS products must be carried out by qualified technicians trained by IRFTS. These operations require electrical and roofing skills.

System maintenance or repair operations must be carried out in compliance with work regulations and, in particular, regulations for work at height. To avoid putting direct weight onto the modules, do not walk on them. Putting weight on the clamps and fixing brackets is acceptable.

In the case of a maintenance or repair operation that requires the removal of a photovoltaic module, the electric disconnection and reconnection procedure applicable for the replacement of a module must be adhered to.

- **Photovoltaic field maintenance**

At least once a month (before summer to optimise electricity production) as part of the roof maintenance:

- ✓ The photovoltaic modules must be cleaned with a hosepipe (without using pressure or a concentrated stream of water)
- ✓ Visual inspection, spotting damage
- ✓ Waterproofing check: check the condition of the different waterproofing parts and that the water runs freely through the flashing channels. Clear out the channels if necessary.
- ✓ Check the wiring
- ✓ Check the fixing points: check that all the screws and bolts are present and properly fixed in place

- **Electrical maintenance**

If, once the real amount of sunshine has been taken into account, a measurable reduction in yearly production from one year to the next is observed, the inverter and the individual modules should be checked to see if they are working properly.

- **Module replacement**

If the glass of the photovoltaic panel or the panel itself is damaged, please follow this procedure:

1. Disconnect the inverter(s) from the network by opening the AC circuit breaker located between the inverter(s) and the meter.
2. Disconnect the photovoltaic field by opening the DC switch/breaker located between the modules and the inverter. If the system is equipped with micro-inverters they automatically disconnect the photovoltaic field after step 1.
3. Dismantle the parts of the assembly system in reverse installation order to gain access to the module's wiring. Never withdraw the connectors in the rain.
4. Assemble the new module in compliance with its installation instructions (see *Installation instructions*). Reconnect the equipotential connection to the new installed module. Make a careful note of the serial number of the photovoltaic module for your records.
5. Check that the modules concerned are working properly:
    a. Measure their open-circuit voltage range
    b. Check the compatibility of this range with the inverter's input range
6. Reconnect the photovoltaic field by closing the DC switch/breaker (except if there are micro-inverters), then the AC circuit breaker.

1) EASY ROOF METAL NOMENCLATURE

1.1) EASY ROOF METAL Nomenclature -Portrait

				Modules	
			Thickness	30-42	
			Width	986-1165	
Number	Code	*Old ref.*	Description / Length	1650-1790	1791-1940
1	092688	*A004V40*	MIDDLE BRACKET	x	
2	092687	*A003V40*	END BRACKET	x	
3	092619	*PRT0P00948A*	ERM MIDDLE CLAMP	x	
4	092627	*PRT0P00952A*	ERM END CLAMP	x	
5	092616	*PRT0P00937A*	ERM Crossing 888	x	
6	092666	*PRT0P00933A*	ERM ADJ JUNCTION FLOW	x	
7	092635	*PRT0P00956A*	ERM Deflector fixing	x	
	093183	-	ERM Deflector fixing EVO	x	
8	092630	*PRT0P00953NA*	ERM End locking bar black	x	
	093247	-	ERM End locking bar 1940 black		x
9	092623	*PRT0P00949NA*	ERM Middle locking bar black	x	
	093245	-	ERM Middle locking bar 1940 black		x
10	092868	-	ERM RAW TRAY HEIGHT 18,3MM	x	
	093253	-	ERM RAW TRAY 1940	x	x
11	092512	*PRT0P00899A*	ERM SUP TRAY RAW	x	
12	092508	*PRT0P00892A*	ERM LOW GATE portrait 7022	x	
	092894	*PRT0P00892A*	ERM LOW GATE portrait black	x	
13	092504	*PRT0P00891A*	ERM RIGHT FLASHING 7022	x	
	092892	*PRT0P00891A*	ERM RIGHT FLASHING black	x	
	093251	-	ERM RIGHT FLASHING 1940 black		x
14	092501	*PRT0P00890A*	ERM LEFT FLASHING 7022	x	
	092890	*PRT0P00890A*	ERM LEFT FLASHING black	x	
	093249	-	ERM LEFT FLASHING 1940 black		x
15	092388/ 092843	*V148V02*	SELF-TAPPING SCREW H 4.2*25 A2/A4 DIN 7504 K	x	
	092912	*V148V02*	SELF-TAPPING SCREW H 4.2*25 A2 DIN 7504 K black	x	
16	092384	*V139V02*	TORX SCREW TF M5*25 A2 ISO 14581	x	
	092914	*V139V02*	TORX SCREW TF M5*25 A2 ISO 14581 black	x	
17	092352	*V012V02*	CHC SCREW M6*30 A2 DIN 912	Module 35 - 42 mm	
	093341	-	CHC SCREW M6*25/25 A2 DIN 912	Module 30 - 38 mm	
18	092351	*V003V02*	Bracket's screw 6 x 40	x	
19	Please see table page 6		ERM Top deflector black	Specific widths	
20	Please see table page 6		ERM TOP FLASHING 10°	Specific widths	
21	Please see table page 6		ERM TOP FLASHING 17°	Specific widths	
22	092691	*PDC0P00533A*	Compression foam 15/1-3	x	

Options

23	092700	*PRT0P00340A*	EASY GROUNGING	x
24	092777	*PRT0P01147A*	ERM PYRAMIDAL TRAY	x
25	092689	*OUT0P01093A*	Portrait adjustment tool	x
	093181	-	Portrait adjustment tool 1165	x
26	Not available	-	EASY ROOF METAL flashing tools	x

Portrait parts with specific width

				Modules
			Thickness	30-42
			Length	1650-1940
Number	Code	*Old ref.*	Description	Specific Width
19	092598	*PRT0P00798NA*	ERM Top deflector black 1005	986 - 1005
	092602	*PRT0P00799NA*	ERM Top deflector black 1025	1006 - 1025
	092669	*PRT0P01043NA*	ERM Top deflector black 1045	1026 - 1045
	092671	*PRT0P01044NA*	ERM Top deflector black 1065	1046 - 1065
	093002	-	ERM Top deflector black 1085	1066 - 1085
	093004	-	ERM Top deflector black 1105	1086 - 1105
	093006	-	ERM Top deflector black 1125	1106 - 1125
	093008	-	ERM Top deflector black 1145	1126 - 1145
	093010	-	ERM Top deflector black 1165	1146 - 1165
20	092488	*PRT0P00888A*	ERM TOP FLASHING 1005 10° 7022	986 - 1005
	092896	*PRT0P00888A*	ERM TOP FLASHING 1005 10° black	986 - 1005
	092490	*PRT0P00889A*	ERM TOP FLASHING 1025 10° 7022	1006 - 1025
	092899	*PRT0P00889A*	ERM TOP FLASHING 1025 10° black	1006 - 1025
	092516	*PRT0P01041A*	ERM TOP FLASHING 1045 10° 7022	1026 - 1045
	092900	*PRT0P01041A*	ERM TOP FLASHING 1045 10° black	1026 - 1045
	092520	*PRT0P01042A*	ERM TOP FLASHING 1065 10° 7022	1046 - 1065
	092902	*PRT0P01042A*	ERM TOP FLASHING 1065 10° black	1046 - 1065
	093067	-	ERM TOP FLASHING 1085 10° black	1066 - 1085
	093069	-	ERM TOP FLASHING 1105 10° black	1086 - 1105
	093072	-	ERM TOP FLASHING 1125 10° black	1106 - 1125
	093074	-	ERM TOP FLASHING 1145 10° black	1126 - 1145
	093076	-	ERM TOP FLASHING 1165 10° black	1146 - 1165
21	092526	*PRT0P01063A*	ERM TOP FLASHING 1005 17° 7022	986 - 1005
	092904	*PRT0P01063A*	ERM TOP FLASHING 1005 17° black	986 - 1005
	092530	*PRT0P01064A*	ERM TOP FLASHING 1025 17° 7022	1006 - 1025
	092906	*PRT0P01064A*	ERM TOP FLASHING 1025 17° black	1006 - 1025
	092534	*PRT0P01065A*	ERM TOP FLASHING 1045 17° 7022	1026 - 1045
	092908	*PRT0P01065A*	ERM TOP FLASHING 1045 17° black	1026 - 1045
	092537	*PRT0P01066A*	ERM TOP FLASHING 1065 17° 7022	1046 - 1065
	092910	*PRT0P01066A*	ERM TOP FLASHING 1065 17° black	1046 - 1065
	093078	-	ERM TOP FLASHING 1085 17° black	1066 - 1085
	093080	-	ERM TOP FLASHING 1105 17° black	1086 - 1105
	093082	-	ERM TOP FLASHING 1125 17° black	1106 - 1125
	093084	-	ERM TOP FLASHING 1145 17° black	1126 - 1145
	093086	-	ERM TOP FLASHING 1165 17° black	1146 - 1165

1.2) Parts not supplied in the kit

a	Countersunk screw six lobes 5x60 stainless steel A2 (wood)
b	Dome head screw six lobes 5x30 stainless steel A2 (flashing wood)
c	Flashing
d	Wood 120x27 (1)
e	Wood 30x27
f	Wood 40x15 (to be trimmed)
g	Wood 150x18 (2)
h	Wood 180x18 (flashing) (2)
I	Drip edge (3)
J	Foam stuck onto flashing (4)

(1) The dimensions of this board used to support the panel may vary depending on the design of the structure and the geographical location of the site, see table p. 16 to 19, and/or use the MY SOLAR PROJECT tool. These plates must be the same thickness as the battens already assembled on the roof undergoing work.
(2) The dimensions of this board used to support the flashing may vary depending on the slope of the roof undergoing work, see table p. 21.
(3) For assembly along the guttering.
(4) The height of the foam is linked to the shape of the tile.

1.3) Exploded System View

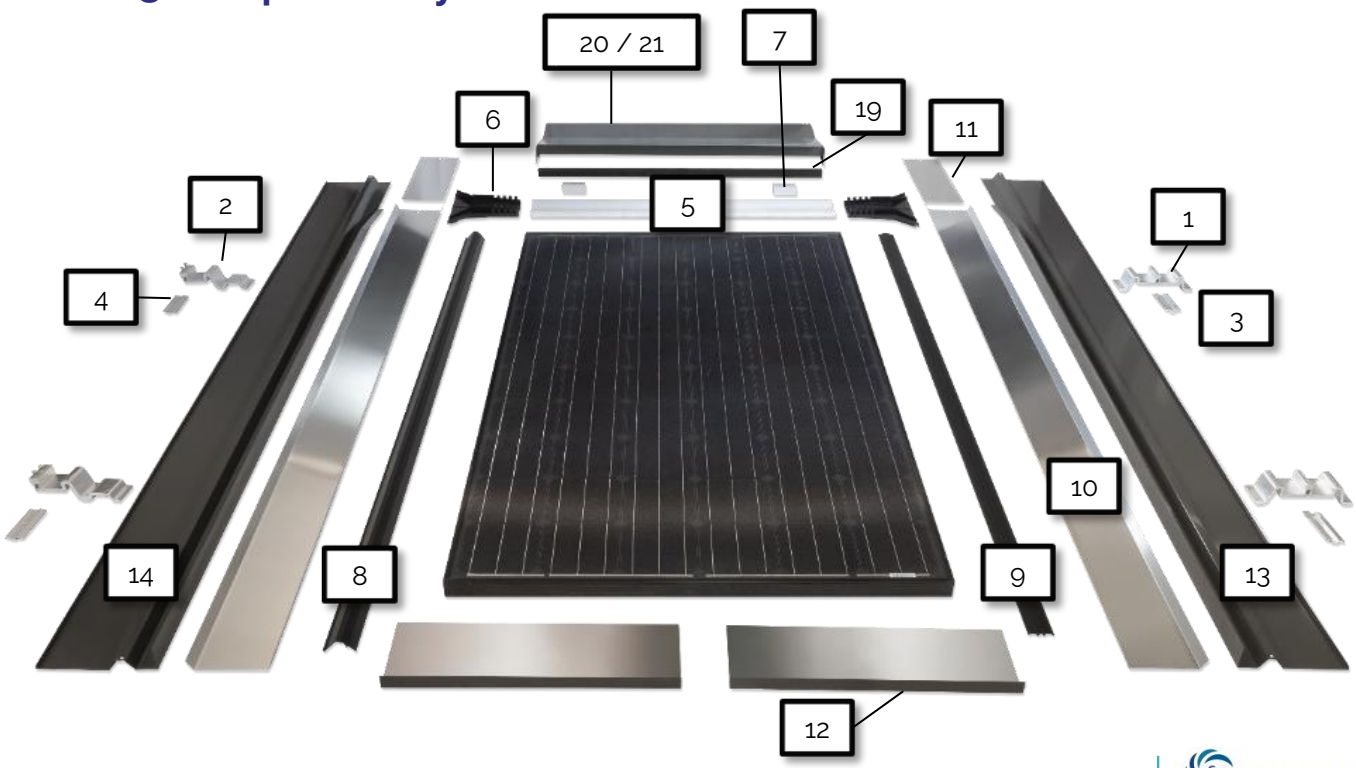

1.4) Representation of parts

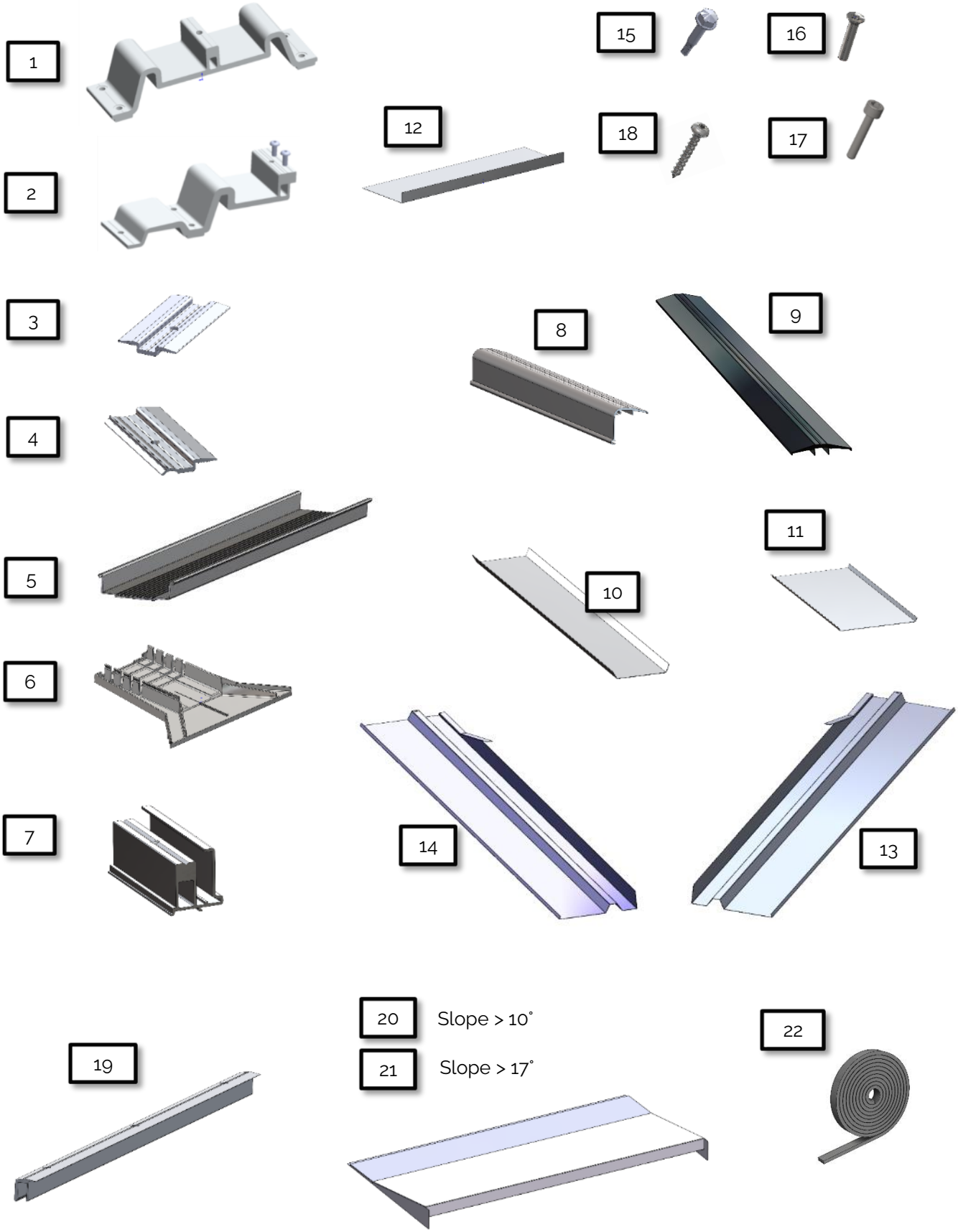

Optional EASY ROOF METAL parts Portrait

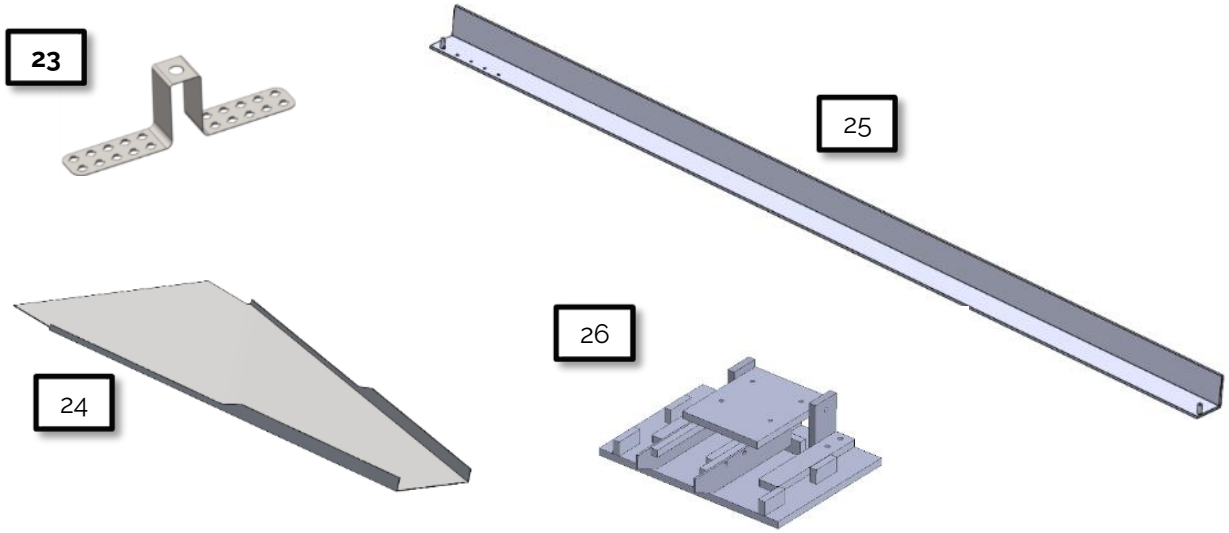

1.5) Breather membrane

Regardless of the slope of the roof, we require the installation of a breather membrane before the EASY ROOF METAL integration system is put in place.
This membrane must be compliant with the E.S.T E1/Sd3/TR3 classification requirements according to NF EN 13859-1 and the membrane installation instructions.
Assemble the lengths of underlay with self-adhesive strips

1.6) Verifications prior to assembly.

The installer must make sure that the following documents are available before starting the installation:

- The installation instructions.
- The document certifying the product.
- The assembly training provided by EDILIANS.

The installer must check the following in the installation instructions for the photovoltaic module:

- The maximum module loads (see module manufacturer's documentation).
- The position of the fixing brackets on the modules (see module manufacturer's documentation).
- The compatibility of the module with the installation system on our website www.edilians.co.uk

2) Overall photovoltaic field dimensions in portrait mode (Visible part of the installation)

2.1) Calculation of the visible field width

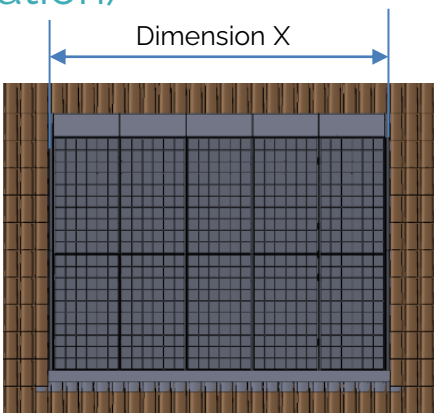

Dimensions of the photovoltaic field	
	Field width (mm)
Main field	Dimension X = Adjustment x No. + (2 x 80)
Side roof edge (edging)	Dimension X = Adjustment x No. + (2 x 87)

Nbx: Number of PV module columns

a) Main field (dimension X)

E.g.

Interval	Module width	1	2	3	4	5	6	7	8	9	10	11	12	13	14	15	16
1023	986 to 1005	1183	2206	3229	4252	5275	6298	7321	8344	9367	10390	11413	12436	13459	14482	15505	16528
1043	1006 to 1025	1203	2246	3289	4332	5375	6418	7461	8504	9547	10590	11633	12676	13719	14762	15805	16848
1063	1026 to 1045	1223	2286	3349	4412	5475	6538	7601	8664	9727	10790	11853	12916	13979	15042	16105	17168
1083	1046 to 1065	1243	2326	3409	4492	5575	6658	7741	8824	9907	10990	12073	13156	14239	15322	16405	17488
1103	1066 to 1085	1263	2366	3469	4572	5675	6778	7881	8984	10087	11190	12293	13396	14499	15602	16705	17808
1123	1086 to 1105	1283	2406	3529	4652	5775	6898	8021	9144	10267	11390	12513	13636	14759	15882	17005	18128
1143	1106 to 1125	1303	2446	3589	4732	5875	7018	8161	9304	10447	11590	12733	13876	15019	16162	17305	18448
1163	1126 to 1145	1323	2486	3649	4812	5975	7138	8301	9464	10627	11790	12953	14116	15279	16442	17605	18768
1183	1146 to 1165	1343	2526	3709	4892	6075	7258	8441	9624	10807	11990	13173	14356	15539	16722	17905	19088

E.g. Module width 992 mm, on 5 columns, adjustment 1023 mm and dimension X= (1023 x 5) + (2 x 80)= 5275

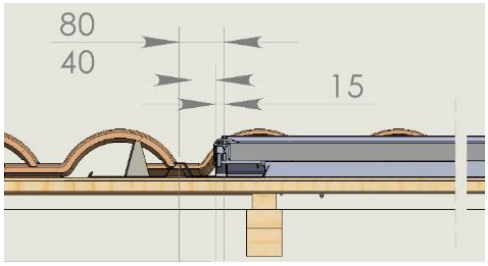

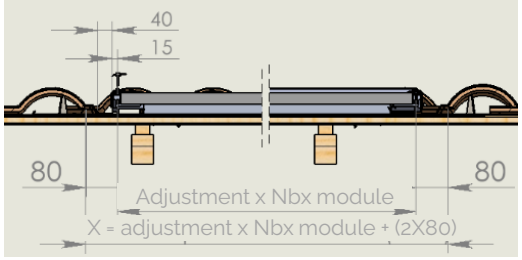

Dimension X should be positioned in the hollow of the tiles.

b) Side roof edge (Dimension X)

E.g.

Interval	Module width	1	2	3	4	5	6	7	8	9	10	11	12	13	14	15	16
1023	986 to 1005	1197	2220	3243	4266	5289	6312	7335	8358	9381	10404	11427	12450	13473	14496	15519	16542
1043	1006 to 1025	1217	2260	3303	4346	5389	6432	7475	8518	9561	10604	11647	12690	13733	14776	15819	16862
1063	1026 to 1045	1237	2300	3363	4426	5489	6552	7615	8678	9741	10804	11867	12930	13993	15056	16119	17182
1083	1046 to 1065	1257	2340	3423	4506	5589	6672	7755	8838	9921	11004	12087	13170	14253	15336	16419	17502
1103	1066 to 1085	1277	2380	3483	4586	5689	6792	7895	8998	10101	11204	12307	13410	14513	15616	16719	17822
1123	1086 to 1105	1297	2420	3543	4666	5789	6912	8035	9158	10281	11404	12527	13650	14773	15896	17019	18142
1143	1106 to 1125	1317	2460	3603	4746	5889	7032	8175	9318	10461	11604	12747	13890	15033	16176	17319	18462
1163	1126 to 1145	1337	2500	3663	4826	5989	7152	8315	9478	10641	11804	12967	14130	15293	16456	17619	18782
1183	1146 to 1165	1357	2540	3723	4906	6089	7272	8455	9638	10821	12004	13187	14370	15553	16736	17919	19102

E.g. (Module width 992 mm, on 5 columns, adjustment 1023 mm min. dimension X= (1023 x 5) + (2 x 87)= 5289 min

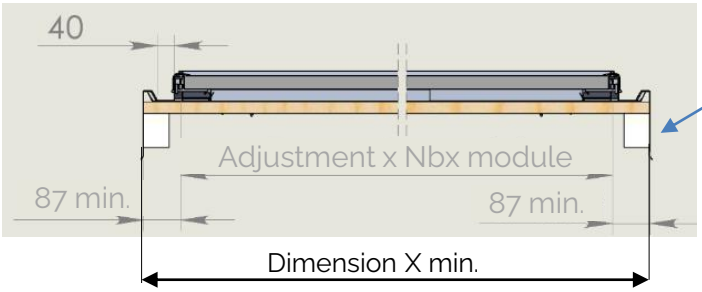

NB: See edging plate plan page 56

2.2) Calculation of the visible field height

Dimensions of the photovoltaic field	
Visible field height (mm)	
Main field Bottom of roof (along the guttering)	**Visible field dimension (mm) = dimension Y + dimension A**

Module L: length of photovoltaic module
Nby: Number of PV module lines

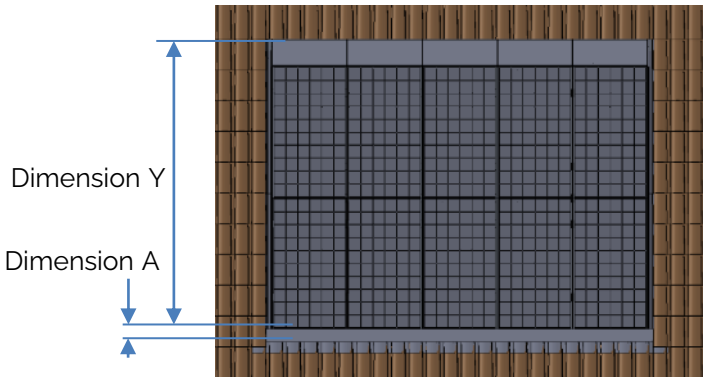

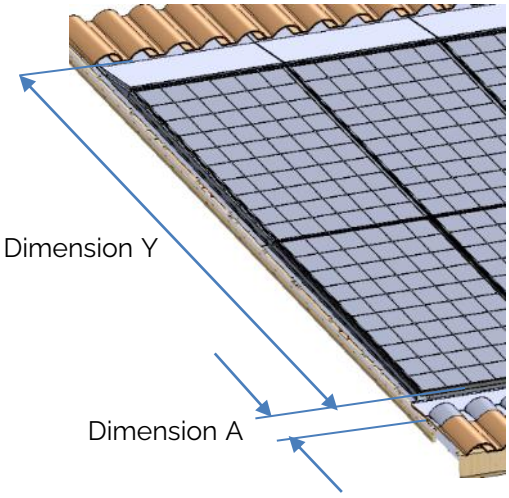

a) Determination of dimension A (dimension of flashing planking)

Dimension "C" is the MIN. width of the board which can be used for a given roof slope to prevent the creation of a counter-slope. However, it is possible to create planking using boards whose width exceeds the MIN.

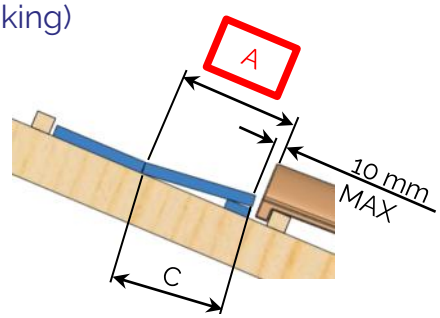

Roof slope (°)	Board width dimension C MIN (mm)	Dimension A Min (mm)
10 to 12	250	260
13 to 16	220	230
17 to 19	180	190
20 to 24	150	160
25 to 60	120	130

necessary to increase dimension A in order to raise the field

Example:

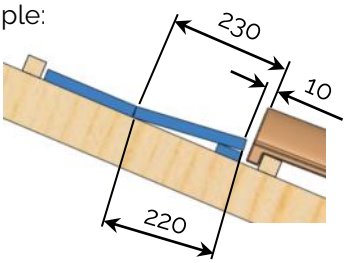

b) Determination of dimension Y

NB: Check module compatibility on www.edilians.com		Top flashing plate 10°	Top flashing plate 17°
		Dimension Y = module L x module Nby + 364	Dimension Y = module L x module Nby + 232
No. of photovoltaic module lines	1	Dimension Y = module L x 1 + 364	Dimension Y = module L x 1 + 232
	2	Dimension Y = module L x 2 + 364	Dimension Y = module L x 2 + 232
	3	Dimension Y = module L x 3 + 364	Dimension Y = module L x 3 + 232
	4	Dimension Y = module L x 4 + 364	Dimension Y = module L x 4 + 232
	5	Dimension Y = module L x 5 + 364	Dimension Y = module L x 5 + 232
	6	Dimension Y = module L x 6 + 364	Dimension Y = module L x 6 + 232
	7	Dimension Y = module L x 7 + 364	Dimension Y = module L x 7 + 232

3) Overall photovoltaic field dimensions in portrait mode with flashings

3.1) Calculation of overall width of the system to be installed

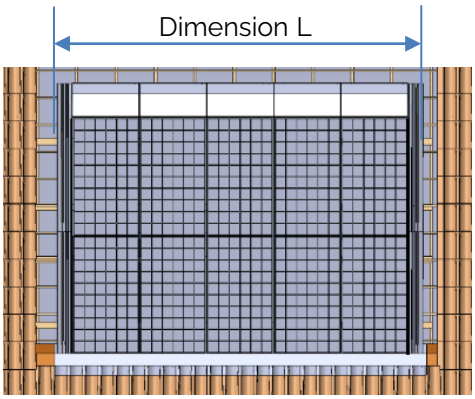

Dimensions of the photovoltaic field	
	Field width (mm)
Main field	Dimension L = Adjustment x No. + (2 x 233)
Side roof edge (edging)	Dimension L = Adjustment x No. + (2 x 87)

Nbx: Number of PV module columns

a) Main field dimension L

E.g.

Interval	Module width	1	2	3	4	5	6	7	8	9	10	11	12	13	14	15	16
1023	986 to 1005	1489	2512	3535	4558	5581	6604	7627	8650	9673	10696	11719	12742	13765	14788	15811	16834
1043	1006 to 1025	1509	2552	3595	4638	5681	6724	7767	8810	9853	10896	11939	12982	14025	15068	16111	17154
1063	1026 to 1045	1529	2592	3655	4718	5781	6844	7907	8970	10033	11096	12159	13222	14285	15348	16411	17474
1083	1046 to 1065	1549	2632	3715	4798	5881	6964	8047	9130	10213	11296	12379	13462	14545	15628	16711	17794
1103	1066 to 1085	1569	2672	3775	4878	5981	7084	8187	9290	10393	11496	12599	13702	14805	15908	17011	18114
1123	1086 to 1105	1589	2712	3835	4958	6081	7204	8327	9450	10573	11696	12819	13942	15065	16188	17311	18434
1143	1106 to 1125	1609	2752	3895	5038	6181	7324	8467	9610	10753	11896	13039	14182	15325	16468	17611	18754
1163	1126 to 1145	1629	2792	3955	5118	6281	7444	8607	9770	10933	12096	13259	14422	15585	16748	17911	19074
1183	1146 to 1165	1649	2832	4015	5198	6381	7564	8747	9930	11113	12296	13479	14662	15845	17028	18211	19394

E.g. Module width 992 mm, on 5 columns, adjustment 1023 mm and dimension L= (1023 x 5) + (2 x 233)= 5581

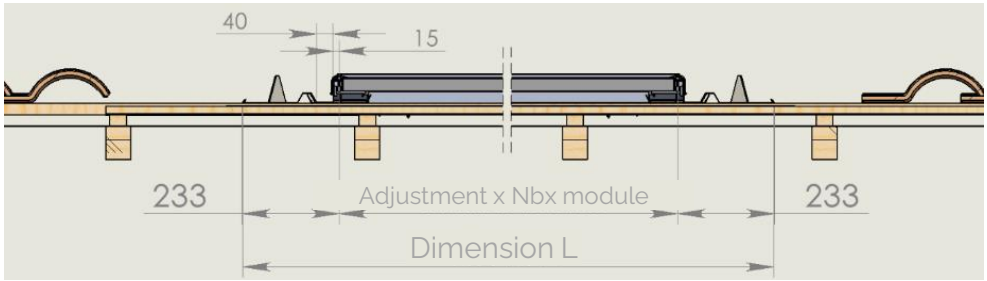

b) Side roof edge (Dimension L)

E.g.

Interval	Module width	1	2	3	4	5	6	7	8	9	10	11	12	13	14	15	16
1023	986 to 1005	1197	2220	3243	4266	5289	6312	7335	8358	9381	10404	11427	12450	13473	14496	15519	16542
1043	1006 to 1025	1217	2260	3303	4346	5389	6432	7475	8518	9561	10604	11647	12690	13733	14776	15819	16862
1063	1026 to 1045	1237	2300	3363	4426	5489	6552	7615	8678	9741	10804	11867	12930	13993	15056	16119	17182
1083	1046 to 1065	1257	2340	3423	4506	5589	6672	7755	8838	9921	11004	12087	13170	14253	15336	16419	17502
1103	1066 to 1085	1277	2380	3483	4586	5689	6792	7895	8998	10101	11204	12307	13410	14513	15616	16719	17822
1123	1086 to 1105	1297	2420	3543	4666	5789	6912	8035	9158	10281	11404	12527	13650	14773	15896	17019	18142
1143	1106 to 1125	1317	2460	3603	4746	5889	7032	8175	9318	10461	11604	12747	13890	15033	16176	17319	18462
1163	1126 to 1145	1337	2500	3663	4826	5989	7152	8315	9478	10641	11804	12967	14130	15293	16456	17619	18782
1183	1146 to 1165	1357	2540	3723	4906	6089	7272	8455	9638	10821	12004	13187	14370	15553	16736	17919	19102

E.g. Module width 992 mm, on 5 columns, adjustment 1023 mm, min. dimension L= (1023 x 5) + (2 x 87)= 5289 min.

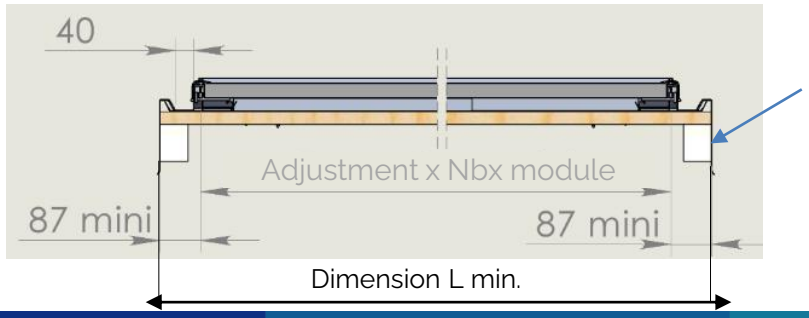

NB: See edging plate plan page 56

3.2) Calculation of overall height of the system to be installed.

Dimensions of the photovoltaic field	
Field height (mm)	
Main field Bottom of roof (along the guttering)	PV field height = dimension H + dimension A

Module L: length of photovoltaic module
Nby: Number of PV module lines

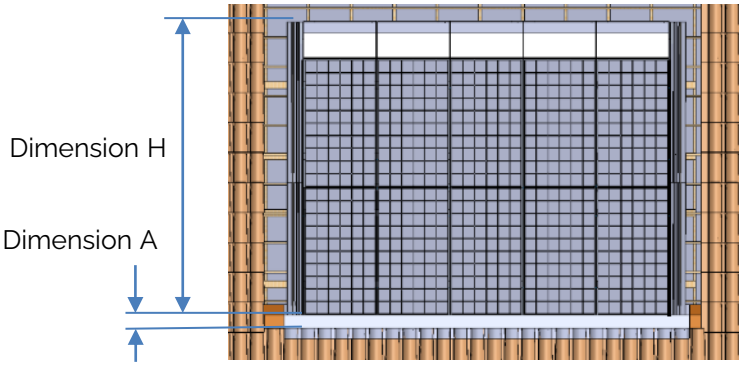

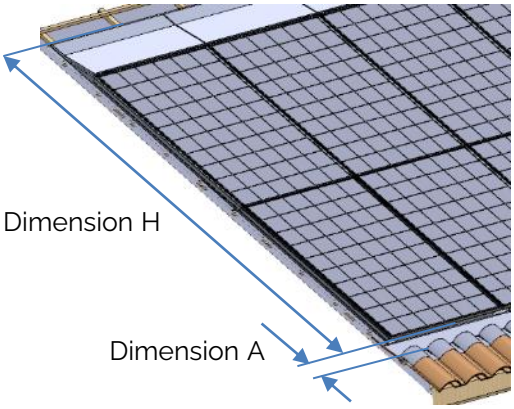

a) Determination of dimension A (dimension of flashing planking)

Dimension "C" is the MIN. width of the board which can be used for a given roof slope to prevent the creation of a counter-slope. However, it is possible to create planking using boards whose width exceeds the MIN.

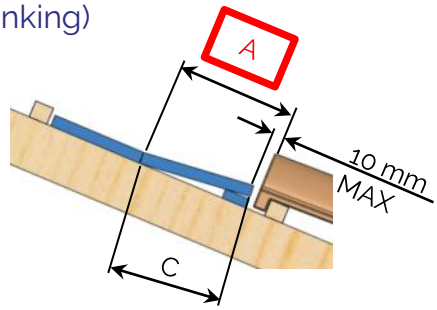

Roof slope (°)	Board width dimension C MIN (mm)	Dimension A Min (mm)
10 to 12	250	260
13 to 16	220	230
17 to 19	180	190
20 to 24	150	160
25 to 60	120	130

NB: in order to adjust tiles at the top of the PV field, it may be necessary to increase dimension A in order to raise the field (See Appendix 3 p. 60)

Example:

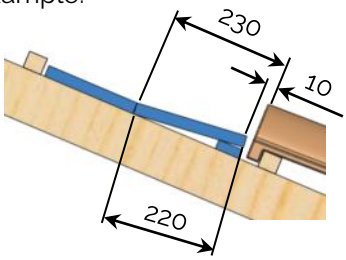

b) Determination of dimension H

		Dimension H	
NB: Check module compatibility on www.edilians.com		Top flashing plate 10°	Top flashing plate 17°
		Dimension H = module L x module Nby + 535	Dimension H = module L x module Nby + 401
No. of photovoltaic module lines	1	Dimension H = module L x 1 + 535	Dimension H = module L x 1 + 401
	2	Dimension H = module L x 2 + 535	Dimension H = module L x 2 + 401
	3	Dimension H = module L x 3 + 535	Dimension H = module L x 3 + 401
	4	Dimension H = module L x 4 + 535	Dimension H = module L x 4 + 401
	5	Dimension H = module L x 5 + 535	Dimension H = module L x 5 + 401
	6	Dimension H = module L x 6 + 535	Dimension H = module L x 6 + 401
	7	Dimension H = module L x 7 + 535	Dimension H = module L x 7 + 401

4) Technical definition of the EASY ROOF METAL frame installation and sizing

The choice and sizing of the EASY ROOF system support boards "d" is made according to the type and structure of the roof frame destined to receive the integrated system. The EASY ROOF METAL system in portrait mode can be installed in roofs with a slope of between 10° and 60°. The buildings must be enclosed (closed roofs).

In portrait mode, the number of fixing points per PV panel can vary between 4 or 6 depending on the boards that have been chosen for the installation of the PV field and/or the installation zone (edge of roof, marine environment etc.)

The sizing software MY SOLAR PROJECT is available on the EDILIANS website: www.edilians.co.uk

The tables in the following pages help establish the dimensions of the support boards that you can use for the assembly for a **PV module with an area up to 2,05 m²** (to calculate the area of the PV module, multiply the length by the width) .
For example a module with dimensions of 1145 mm x 1790 mm has an area of 2,05 m².
For PV modules with a surface area greater than 2,05 m², it is obligatory to validate the system with the MY SOLAR PROJECT software.

The values set out the in the tables below apply only to those geographic zones that correspond to wind zone 1 to 4 of the snow and wind regulations French Standard NF EN 1991-1-4, whatever the snow zone, and for an altitude of less than 900m.
For other cases, a technical and feasibility study must be carried out.
It is essential to adhere to the sizing instructions

For roofs with a continuous batten, an anti-abrasion underlay that is compliant with the DTU (Construction Unified Codes of Practice) is mandatory

Please note that the guarantee will only apply if the installation has been carried out in compliance with the rules provided in these instructions and in the different annexes to which they may refer.

COMPATIBILITY MODULE

This installer is responsible for ensuring that the PV module chosen for the installation is included in the compatibility list drawn up by EDILIANS (www.edilians.co.uk) and adapted to climatic loads.
If the EASY ROOF METAL system is to be installed on a building by the sea or one used for intensive farming, it is up to the companies installing the system to make sure that all of the parts used in the installation, in particular the termination system, are compatible with either salt-spray exposure or an ammonia filled environment.
In particular, the modules must be validated according to French standards NF EN 61701 and NF EN 62716.
The assembly instructions of the photovoltaic module manufacturer must be respected. It is up to the installer to check that the photovoltaic module manufacturer's requirements are respected during the mounting of the said module into the fixing system that is the subject of the present instructions.

TRAINING

EDILIANS recommends and offers an "installer" training course, provided by itself or another company.
This training course covers the installation of the EASY ROOF METAL system as well as all aspects relating to safety (work at height, electrical safety).
A roof structure at ground level enables the different elements of the installation to be presented and allows the participants to work under real-life conditions according to the technical regulations in force. It also serves to highlight awareness of the dangers inherent to this profession and of the importance of following safety regulations.

SAFETY INSTRUCTIONS

Before carrying out any work on a installation, appropriate safety measures for working at height must be put in place such as, accident prevention measures using CPE or PPE for each worker.

INSTALLER QUALIFICATIONS

To become an EASY ROOF METAL system installer you must be a professional with roofing and electricity expertise corresponding to the French designations QUALIPV BAT 5911-ENR Photovoltaïque, QUALIFELEC SPV1 and SPV2, or QUALIPV module élec.

5) Field of use.

Used in mainland France and French overseas territories.

- Rural non-polluted, normal or heavy industrial or marine environments.
- On insulated or non-insulated buildings, exclusively on a cold roof.
- Only in places with low or intermediate humidity, in a healthy environment.
- Used in seismic zones up to zone 4 for category IV buildings.
- Whole or partial roof installation.
- The length between the bottom of the PV field and the roof ridge must not be more than 40 m with standard assembly.

PERFORMANCE IN DIFFICULT WEATHER CONDITIONS

- The photovoltaic panel structure does not contribute to the stability of the building.
- The EASY ROOF METAL system is appropriate for wind zone 4 and for an altitude of less than 900 m for snow loads:
  - ✓ The system mounted with 6 brackets is valid for normal wind loads up to 5400 Pascal and normal snow loads up to 5400 Pascal.
  - ✓ The system mounted with 4 brackets is valid for normal wind loads up to 3600 Pascal and normal snow loads up to 3600 Pascal.
  - ✓ Check the performance of the module according to these loads with the fixing point positions recommended by the module manufacturer
- Moreover, it is the installer's responsibility to ensure that the photovoltaic module used is appropriate for the climate loads.
- Any modifications to loads for renovation projects must be studied by a specialist design office in compliance with current calculation regulations. In any event, the solidity of the existing structure must be tested by a certified testing body or by a specialist design office.

ELECTRICAL SAFETY OF THE PHOTOVOLTAIC FIELD

- The electrical standards in force must be complied with. In particular, in France, standards NF C15-100 and NF C15-712 are mandatory
- The documentation supplied with the different modules makes it possible to confirm that they comply with French standards EN 61 215 and EN 61 730 (guaranteed electric and thermal performances: category A according to French standard NF EN 61 730 up to 1000 V DC).
- Some technical data sheets from module manufacturers mention that the characteristics of the parts can be changed without prior notice. It is the installer's responsibility to ensure that the panels are always category A.
- The photovoltaic modules are fitted with class A plug-in connectors classified as IP65. The installer must ensure that all the PV modules are of the same brand and have the same reference.
- So as to guarantee the safety of the roof-integrated photovoltaic field, we recommend the use of PV modules equipped with junction boxes that comply to standard CEI 62790:2014
- Bearing in mind the mention made in the technical data sheets, it is the installer's responsibility to make sure that the category of the equipment and the protection rating are A and IP65 respectively.

EDILIANS REFERENCE DOCUMENTS

The reference documents can be downloaded on the following website www.edilians.co.uk

6) Technical definition of the EASY ROOF frame installation and sizing

6.1) Normal zone, installation in the standard area or lower edge

Results are valid of PV modules with a surface area up to 2,05 m²

For any other configuration, please validate your system with the MY SOLAR PROJECT software.

NB: dimensions in mm

Normal			10° to 60° normal site (IIIa category) gable roof																Countersunk screw stainless steel A2 MIN length (structural connecting screw)
			Wind Zone 1				Wind Zone 2				Wind Zone 3				Wind Zone 4				
			No. brackets	Batten thickness	Min board width	No. screws / intersection	No. brackets	Batten thickness	Min board width	No. screws / intersection	No. brackets	Batten thickness	Min board width	No. screws / intersection	No. brackets	Batten thickness	Min board width	No. screws / intersection	
Main field	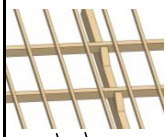  Spacing	**Spacing ≤ 600** Spacing of trusses or rafters	**6**	15	200	2	**6**	15	220	2	**6**	15	250	2					5x60/32
			4	22	130	2	**4**	22	150	2	**4**	22	170	2	**4**	22	200	2	5x60/32
			4	27	100	2	**4**	27	100	2	**4**	27	120	2	**4**	27	140	2	5x60/33
			4	40	100	2	**4**	40	100	2	**4**	40	100	2	**4**	40	100	2	5x70/32
		600<Spacing ≤ 900 Spacing of trusses or rafters	**4**	22	200	2	**4**	22	220	2	**6**	22	180	2	**6**	22	200	2	5x60/32
			4	27	130	2	**4**	27	150	2	**4**	27	180	2	**4**	27	200	2	5x60/32
			4	40	100	2	**4**	40	100	2	**4**	40	100	2	**4**	40	100	2	5x70/32
		Spacing ≤ 1500 Metal truss	**4**	40	130	2	**4**	40	130	2	**4**	40	140	2	**4**	40	160	2	Win 6.3x70 (2)
			6	40	100	2	**6**	40	100	2	**6**	40	100	2	**6**	40	110	2	Win 6.3x70 (2)
	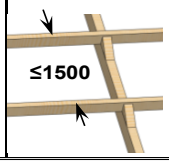 ≤1500	**Spacing ≤ 1500 (1)** Structure with built-in battening Following roof slope (3)	**4**	22	150	3	**4**	22	150	3	**4**	22	160	3	**4**	22	180	3	5x60/32
			4	27	120	3	**4**	27	120	3	**4**	27	120	3	**4**	27	140	3	5x60/32
			4	40	100	3	**4**	40	100	3	**4**	40	100	3	**4**	40	100	3	5x70/32
		Spacing ≤ 1500 (1) Wood or metal structure	**4**	30	170	3	**4**	30	200	3	**4**	30	240	3	**6**	30	190	3	5x60/32
			4	40	100	3	**4**	40	120	3	**4**	40	140	3	**4**	40	160	3	5x70/32
Lower edge	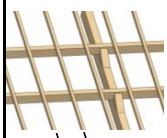  Spacing	**Spacing ≤ 600** Spacing of trusses or rafters	**6**	15	220	2	**6**	15	250	2									5x60/32
			4	22	140	2	**4**	22	170	2	**4**	22	200	2	**4**	22	230	2	5x60/32
			4	27	100	2	**4**	27	110	2	**4**	27	130	2	**4**	27	150	2	5x60/33
			4	40	100	2	**4**	40	100	2	**4**	40	100	2	**4**	40	100	2	5x70/32
		600<Spacing ≤ 900 Spacing of trusses or rafters	**4**	22	210	2	**4**	22	250	2	**6**	22	200	2	**6**	22	240	2	5x60/32
			4	27	140	2	**4**	27	170	2	**4**	27	200	2	**4**	27	230	2	5x60/32
			4	40	100	2	**4**	40	100	2	**4**	40	100	2	**4**	40	100	2	5x70/32
		Spacing ≤ 1500 Metal truss	**4**	40	130	2	**4**	40	130	2	**4**	40	150	2	**4**	40	170	2	Win 6.3x70 (2)
			6	40	100	2	**6**	40	100	2	**6**	40	100	2	**6**	40	120	2	Win 6.3x70 (2)
	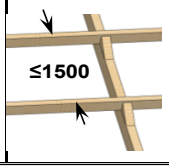 ≤1500	**Spacing ≤ 1500 (1)** Structure with built-in battening Following roof slope (3)	**4**	22	150	3	**4**	22	200	3	**4**	22	220	3	**4**	22	250	3	5x60/32
			4	27	120	3	**4**	27	120	3	**4**	27	150	3	**4**	27	160	3	5x60/32
			4	40	100	3	**4**	40	100	3	**4**	40	100	3	**4**	40	100	3	5x70/32
		Spacing ≤ 1500 (1) Wood or metal structure	**4**	30	190	3	**4**	30	220	3	**6**	30	180	3	**6**	30	220	3	5x60/32
			4	40	110	3	**4**	40	130	3	**4**	40	150	3	**4**	40	170	3	5x70/32

(1): Layout of wood in direction of roof slope.
(2): Wingteks 6.3 x 70 (Etanco Reference: 288 283 or 288 889).
(3): The support boards are attached in the battens AND the purlins

6.2) Normal zone, installation on the side edge or at an angle

Results are valid of PV modules with a surface area up to 2,05 m²

For any other configuration, please validate your system with the MY SOLAR PROJECT software.

Normal

NB: dimensions in mm

		10° to 60° normal site (IIIa category) gable roof																
		Wind Zone 1				Wind Zone 2				Wind Zone 3				Wind Zone 4				
		No. brackets	Batten thickness	Min board width	No. screws / intersection	No. brackets	Batten thickness	Min board width	No. screws / intersection	No. brackets	Batten thickness	Min board width	No. screws / intersection	No. brackets	Batten thickness	Min board width	No. screws / intersection	**Countersunk screw stainless steel A2 MIN length** (structural connecting screw)
Side edge	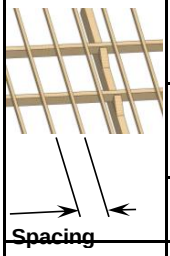 Spacing	**Spacing ≤ 600**	6	15	230	2												5x60/32
		Spacing of trusses or rafters	4	22	160	2	4	22	190	2	4	22	230	2	6	22	180	2	5x60/32
			4	27	110	2	4	27	130	2	4	27	150	2	4	27	180	2	5x60/33
			4	40	100	2	4	40	100	2	4	40	100	2	4	40	100	2	5x70/32
		600<Spacing ≤ 900	4	22	240	2	6	22	190	2	6	22	230	2	6	22	260	2	5x60/32
		Spacing of trusses or rafters	4	27	160	2	4	27	190	2	4	27	230	2	6	27	180	2	5x60/32
			4	40	100	2	4	40	100	2	4	40	100	2	4	40	120	2	5x70/32
		Spacing ≤ 1500	4	40	130	2	4	40	150	2	4	40	170	2	4	40	200	2	Win 6.3x70 (2)
		Metal truss	6	40	100	2	6	40	100	2	6	40	120	2	6	40	140	2	Win 6.3x70 (2)
	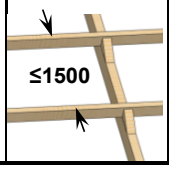 ≤1500	**Spacing ≤ 1500 (1)**	4	22	150	3	4	22	170	3	4	22	200	3	6	22	150	3	5x60/32
		Structure with built-in battening	4	27	120	3	4	27	130	3	4	27	160	3	6	27	120	3	5x60/32
		Following roof slope (3)	4	40	100	3	4	40	100	3	4	40	100	3	6	40	100	3	5x70/32
		Spacing ≤ 1500 (1)	4	30	220	3	6	30	180	3	6	30	200	3	6	30	240	3	5x60/32
		Wood or metal structure	4	40	120	3	4	40	150	3	4	40	170	3	4	40	200	3	5x70/32
Angle	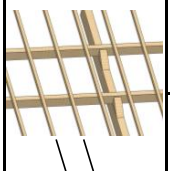 Spacing	**Spacing ≤ 600**	6	15	250	2												5x60/32
		Spacing of trusses or rafters	4	22	180	2	4	22	210	2	6	22	170	2	6	22	190	2	5x60/32
			4	27	120	2	4	27	140	2	4	27	160	2	6	27	130	2	5x60/33
			4	40	100	2	4	40	100	2	4	40	100	2	6	40	100	2	5x70/32
		600<Spacing ≤ 900	6	22	180	2	6	22	210	2	6	22	250	2					5x60/32
		Spacing of trusses or rafters	4	27	170	2	4	27	210	2	4	27	240	2	6	27	190	2	5x60/32
			4	40	100	2	4	40	100	2	4	40	110	2	6	40	100	2	5x70/32
		Spacing ≤ 1500	4	40	130	2	4	40	160	2	4	40	190	2	4	40	220	2	Win 6.3x70 (2)
		Metal truss	6	40	100	2	6	40	110	2	6	40	130	2	6	40	150	2	Win 6.3x70 (2)
	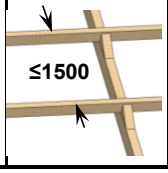 ≤1500	**Spacing ≤ 1500 (1)**	4	22	160	3	4	22	180	3	4	22	220	3	6	22	250	3	5x60/32
		Structure with built-in battening	4	27	120	3	4	27	140	3	4	27	170	3	6	27	160	3	5x60/32
		Following roof slope (3)	4	40	100	3	4	40	100	3	4	40	100	3	6	40	100	3	5x70/32
		Spacing ≤ 1500 (1)	6	30	160	3	6	30	190	3	6	30	220	3	6	30	250	3	5x60/32
		Wood or metal structure	4	40	130	3	4	40	160	3	4	40	190	3	6	40	140	3	5x70/32

(1): Layout of wood in direction of roof slope.

(2): Wingteks 6.3 x 70 (Etanco Reference: 288 283 or 288 889).

(3): The support boards are attached in the battens AND the purlins

6.3) Maritime zone, installation in the main field or lower edge

Results are valid of PV modules with a surface area up to 2,05 m²

For any other configuration, please validate your system with the MY SOLAR PROJECT software.

Maritime

NB: dimensions in mm

		10° to 60° exposed site (category I) gable roof																
		Zone 1				Zone 2				Zone 3				Zone 4				
		No. brackets	Batten thickness	Min board width	No. screws / intersection	No. brackets	Batten thickness	Min board width	No. screws / intersection	No. brackets	Batten thickness	Min board width	No. screws / intersection	No. brackets	Batten thickness	Min board width	No. screws / intersection	**Countersunk screw stainless steel A2 MIN length** (structural connecting screw)
Main field	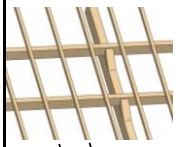	**Spacing ≤ 600**																5x60/32
		Spacing of trusses or rafters	**4**	22	190	2	**4**	22	230	2	**6**	22	180	2	**6**	22	210	2	5x60/32
			4	27	130	2	**4**	27	150	2	**4**	27	180	2	**4**	27	210	2	5x60/33
			4	40	100	2	**4**	40	100	2	**4**	40	100	2	**4**	40	100	2	5x70/32
	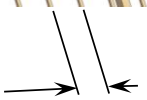 **Spacing**	**600<Spacing ≤ 900**	**6**	22	190	2	**6**	22	230	2									5x60/32
		Spacing of trusses or rafters	**4**	27	190	2	**4**	27	230	2	**6**	27	180	2	**6**	27	210	2	5x60/32
			4	40	100	2	**4**	40	110	2	**4**	40	120	2	**4**	40	140	2	5x70/32
		Spacing ≤ 1500	**4**	40	150	2	**4**	40	170	2	**4**	40	200	2	**4**	40	240	2	Win 6.3x70 (2)
		Metal truss	**6**	40	100	2	**6**	40	120	2	**6**	40	140	2	**6**	40	160	2	Win 6.3x70 (2)
	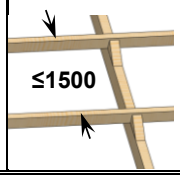 **≤1500**	**Spacing ≤ 1500 (1)**	**4**	22	170	3	**4**	22	200	3	**4**	22	240	3	**6**	22	190	3	5x60/32
		Structure with built-in battening	**4**	27	130	3	**4**	27	160	3	**4**	27	190	3	**4**	27	210	3	5x60/32
		Following roof slope (3)	**4**	40	100	3	**4**	40	100	3	**4**	40	110	3	**4**	40	130	3	5x70/32
		Spacing ≤ 1500 (1)	**6**	30	180	3	**6**	30	210	3	**6**	30	240	3					5x60/32
		Wood or metal structure	**4**	40	150	3	**4**	40	170	3	**4**	40	200	3	**4**	40	240	3	5x70/32

Lower edge	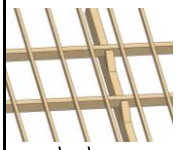	**Spacing ≤ 600**																5x60/32
		Spacing of trusses or rafters	**4**	22	210	2	**4**	22	250	2	**6**	22	200	2	**6**	22	240	2	5x60/32
			4	27	140	2	**4**	27	170	2	**4**	27	200	2	**4**	27	230	2	5x60/33
			4	40	100	2	**4**	40	100	2	**4**	40	100	2	**4**	40	110	2	5x70/32
	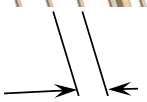 **Spacing**	**600<Spacing ≤ 900**	**6**	22	210	2	**6**	22	250	2									5x60/32
		Spacing of trusses or rafters	**4**	27	210	2	**6**	27	170	2	**6**	27	200	2	**6**	27	230	2	5x60/32
			4	40	100	2	**4**	40	120	2	**4**	40	140	2	**4**	40	160	2	5x70/32
		Spacing ≤ 1500	**4**	40	160	2	**4**	40	190	2	**4**	40	230	2	**4**	40	260	2	Win 6.3x70 (2)
		Metal truss	**6**	40	110	2	**6**	40	130	2	**6**	40	150	2	**6**	40	180	2	Win 6.3x70 (2)
	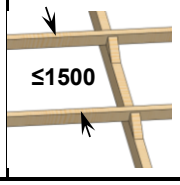 **≤1500**	**Spacing ≤ 1500 (1)**	**4**	22	190	3	**4**	22	220	3	**4**	22	260	3					5x60/32
		Structure with built-in battening	**4**	27	150	3	**4**	27	180	3	**4**	27	210	3	**4**	27	240	3	5x60/32
		Following roof slope (3)	**4**	40	100	3	**4**	40	100	3	**4**	40	120	3	**4**	40	140	3	5x70/32
		Spacing ≤ 1500 (1)	**6**	30	190	3	**6**	30	230	3									5x60/32
		Wood or metal structure	**6**	40	110	3	**6**	40	130	3	**6**	40	150	3	**6**	40	180	3	5x70/32

(1): Layout of wood in direction of roof slope.

(2): Wingteks 6.3 x 70 (Etanco Reference: 288 283 or 288 889).

(3): The support boards are attached in the battens AND the purlins

6.4) Maritime zone, installation on the side edge or at an angle

Results are valid of PV modules with a surface area up to 2,05 m²

For any other configuration, please validate your system with the MY SOLAR PROJECT software.

Maritime

NB: dimensions in mm

		10° to 60° exposed site (category I) gable roof																
		Wind Zone 1				Wind Zone 2				Wind Zone 3				Wind Zone 4				
		No. brackets	Batten thickness	Min board width	No. screws / intersection	No. brackets	Batten thickness	Min board width	No. screws / intersection	No. brackets	Batten thickness	Min board width	No. screws / intersection	No. brackets	Batten thickness	Min board width	No. screws / intersection	**Countersunk screw stainless steel A2 MIN length** (structural connecting screw)
Side edge	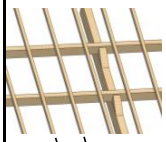 **Spacing ≤ 600**																	5x60/32
	Spacing of trusses or rafters	6	22	170	2	6	22	200	2	6	22	230	2					5x60/32
		6	27	110	2	6	27	130	2	6	27	150	2	6	27	180	2	5x60/33
		4	40	100	2	4	40	100	2	4	40	110	2	4	40	120	2	5x70/32
	600<Spacing ≤ 900	6	22	250	2													5x60/32
	Spacing of trusses or rafters	6	27	170	2	6	27	200	2	6	27	230	2					5x60/32
		4	40	110	2	4	40	130	2	4	40	160	2	4	40	180	2	5x70/32
	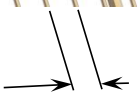 **Spacing** **Spacing ≤ 1500**	4	40	190	2	4	40	220	2	4	40	260	2					Win 6.3x70 (2)
	Metal truss	6	40	130	2	6	40	150	2	6	40	180	2	6	40	200	2	Win 6.3x70 (2)
	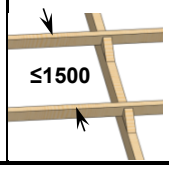 **≤1500** **Spacing ≤ 1500 (1)**	6	22	150	3	6	22	170	3	6	22	200	3	6	22	240	3	5x60/32
	Structure with built-in battening	4	27	170	3	4	27	200	3	4	27	240	3	6	27	180	3	5x60/32
	Following roof slope (3)	4	40	100	3	4	40	120	3	4	40	140	3	4	40	160	3	5x70/32
	Spacing ≤ 1500 (1)	6	30	220	3	6	30	260	3									5x60/32
	Wood or metal structure	6	40	130	3	6	40	150	3	6	40	180	3	6	40	200	3	5x70/32
Angle	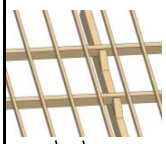 **Spacing ≤ 600**																	5x60/32
	Spacing of trusses or rafters	6	22	180	2	6	22	210	2	6	22	250	2					5x60/32
		6	27	120	2	6	27	140	2	6	27	170	2	6	27	190	2	5x60/33
		4	40	100	2	6	40	100	2	6	40	100	2	6	40	100	2	5x70/32
	600<Spacing ≤ 900																	5x60/32
	Spacing of trusses or rafters	6	27	180	2	6	27	210	2	6	27	250	2					5x60/32
		4	40	120	2	6	40	100	2	6	40	115	2	6	40	130	2	5x70/32
	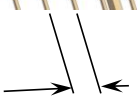 **Spacing** **Spacing ≤ 1500**	4	40	200	2	4	40	240	2									Win 6.3x70 (2)
	Metal truss	6	40	140	2	6	40	160	2	6	40	190	2	6	40	220	2	Win 6.3x70 (2)
	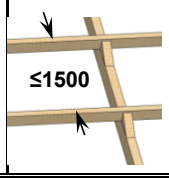 **≤1500** **Spacing ≤ 1500 (1)**	6	22	160	3	6	22	190	3	6	22	220	3	6	22	260	3	5x60/32
	Structure with built-in battening	6	27	120	3	6	27	150	3	6	27	170	3	6	27	200	3	5x60/32
	Following roof slope (3)	6	40	100	3	6	40	100	3	6	40	100	3	6	40	115	3	5x70/32
	Spacing ≤ 1500 (1)	6	30	240	3													5x60/32
	Wood or metal structure	6	40	140	3	6	40	160	3	6	40	190	3	6	40	220	3	5x70/32

(1): Layout of wood in direction of roof slope.

(2): Wingteks 6.3 x 70 (Etanco Reference: 288 283 or 288 889).

(3): The support boards are attached in the battens AND the purlins

7) EASY ROOF system assembly instructions

7.1) PV field centred on the roof slope

7.1.1) Removal of tiles from the PV field

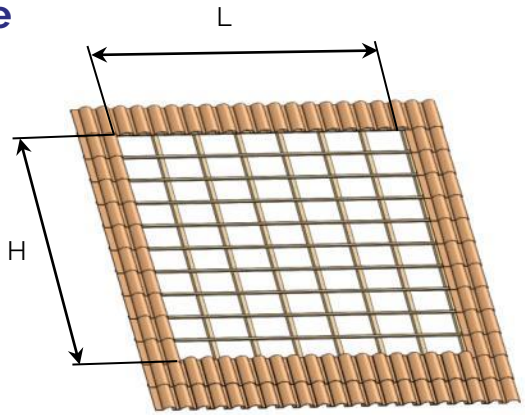

This section of the assembly instructions only concerns PV field installations in the centre of a roof slope. See page 23 of this document for installations on the edge of the roof along the guttering

Clear tiles from the photovoltaic field installation zone, see paragraph 3 for L and H.

7.1.2) Definition of the wood to make the planking for the flashing at the bottom of the PV field

1°) Define the thickness of the wood forming the planking according to the thickness of the support boards (d)*.

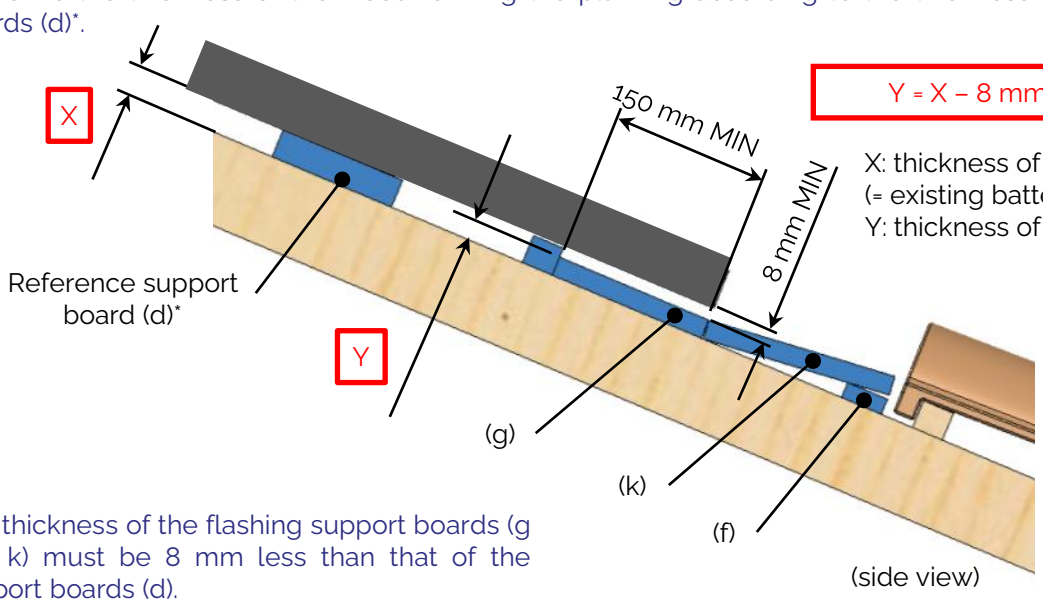

Y = X – 8 mm MIN

X: thickness of (d)
(= existing batten thickness)
Y: thickness of (g) and (k)

The thickness of the flashing support boards (g and k) must be 8 mm less than that of the support boards (d).

2°) Position the board (f) so that the top of the board (k) is flush with the run-off surface of the tile or a few millimetres higher.

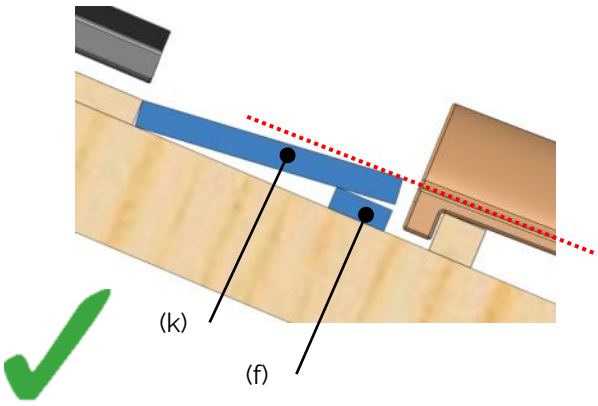

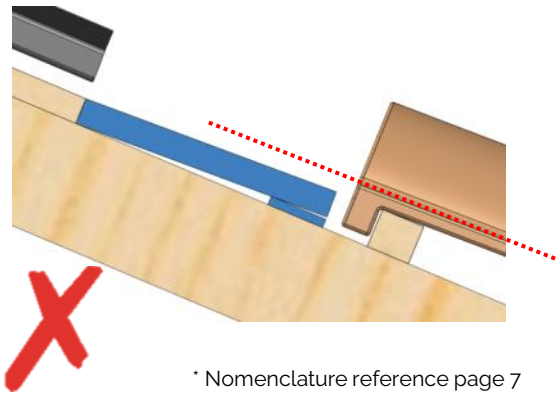

* Nomenclature reference page 7

PV field centred on the roof slope

7.1.3) Installation of the planking for the flashing and the reference board

1°) Determination of dimension A (dimension of flashing planking)

Dimension "C" is the MIN. width of the board which can be used for a given roof slope to prevent the creation of a counter-slope. However, it is possible to create planking using boards whose width exceeds the MIN.

Roof slope (°)	Board width dimension (k) C MIN (mm)	Dimension A Min (mm)
10 to 12	250	260
13 to 16	220	230
17 to 19	180	190
20 to 24	150	160
25 to 60	120	130

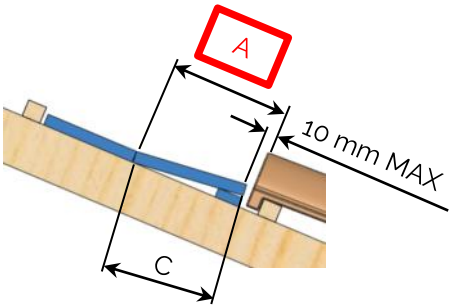

2°) Position the flashing planking MAX 10 mm from the top of the first tile at the bottom of the PV field. Use the wood (g) and (k) defined during the previous operation. Place the batten (e) against the board (g). Screw with 5x60 countersunk stainless steel screws.

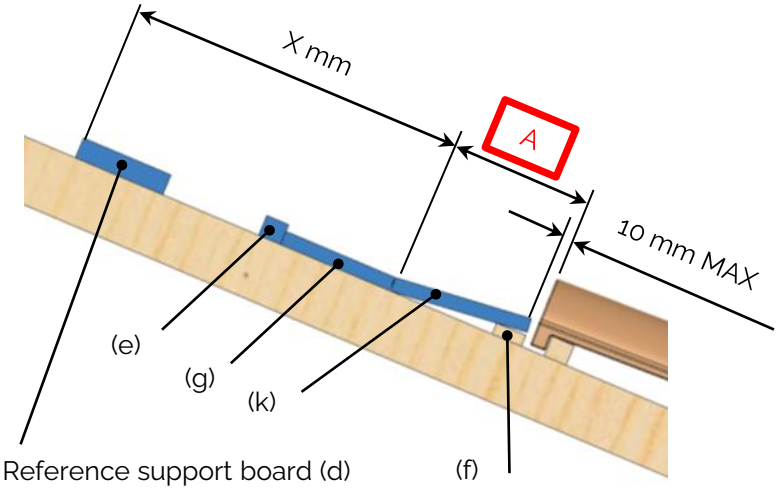

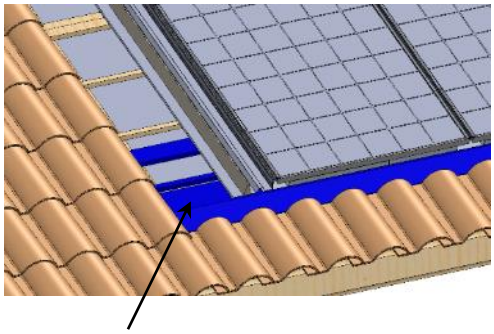

The planking and the flashing must overhang each side of the PV field by at least 2 tiles.

3°) Position the first reference support board (d). Position the board X mm from the break in the planking. (X is the dimension provided by the module manufacturer to attach the module).
When screwing the board, follow the recommendations on pages 16 to 19 to determine the type and number of screws to be used on each supporting crosspiece.

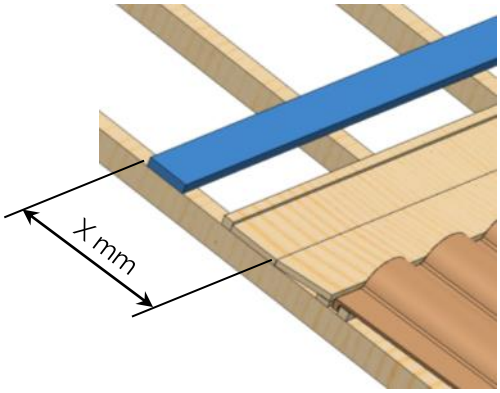

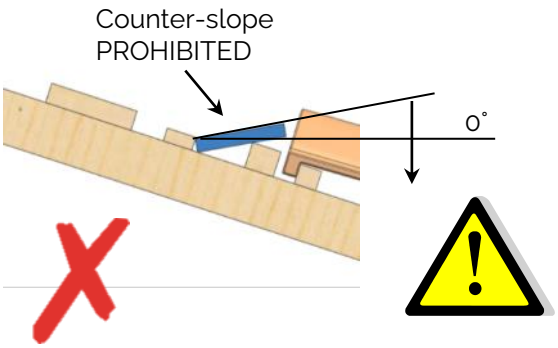

PV field centred on the roof slope

7.1.4) Installation of the flashing

Position the flashing band. Take care not to glue the ends and the upper edge so that they can be folded back.
The overlap of the tiles will depend on the choice of flashing.

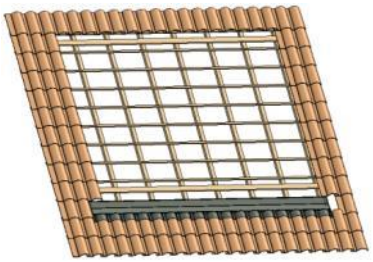

Make sure that MIN 150 mm of the tiles are covered.

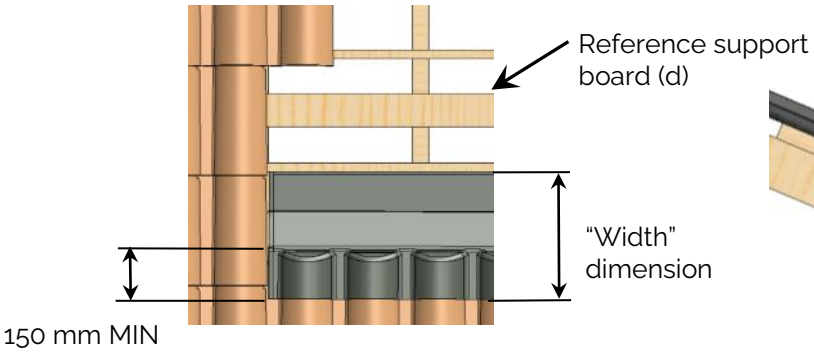

MIN "width" = (2 x 150) + dimension A

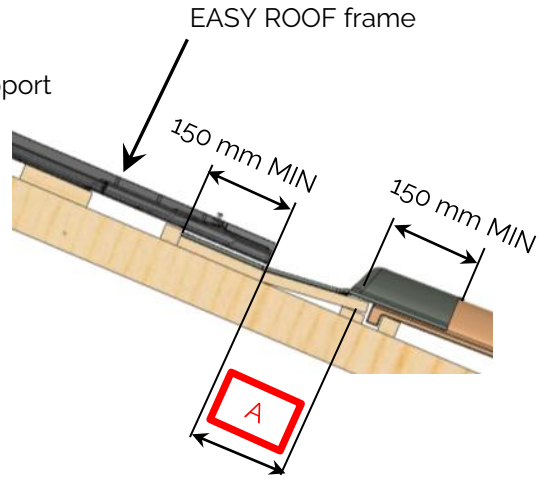

Fold back the upper edge of the flashing by 10 to 15 mm in line with the upper batten over the entire width of the PV field

(Left side of PV field)

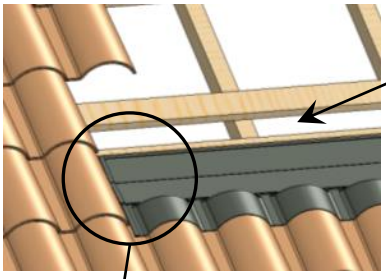

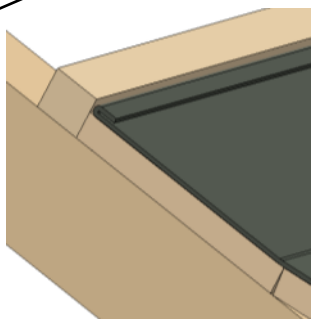

(Right side of PV field)

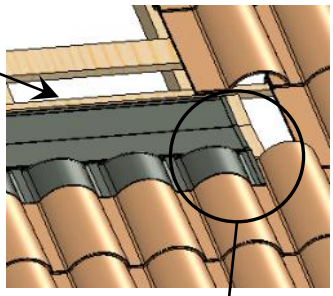

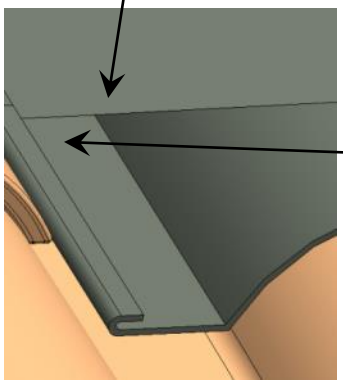

Fold back the right and left edges of the flashing by 10 to 15 mm over the entire height

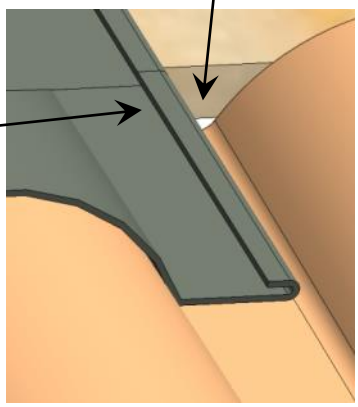

PV field along the guttering

7.2) PV field positioned along the guttering

7.2.1) Removal of tiles from the PV field

This section of the assembly instructions only concerns PV field installations along the guttering

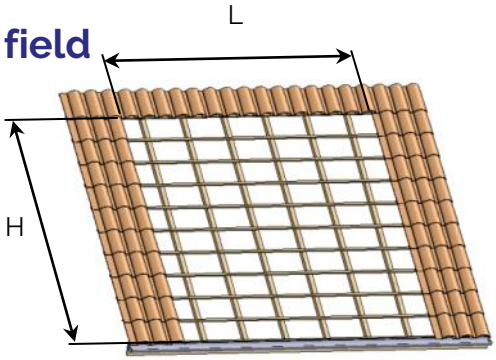

Clear tiles from the photovoltaic field installation zone, see paragraph 3 for L and H.

7.2.2) Positioning of the planking along the guttering

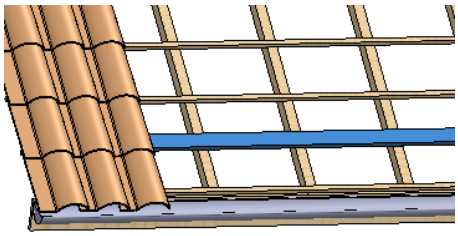

Position the first reference support board. The positioning dimension is X mm (dimension provided by the module manufacturer) from the first batten (anti-tilt) or the edge board. When screwing the board, follow the recommendations on pages 16 to 19 to determine the type and number of screws to be used on each supporting crosspiece.

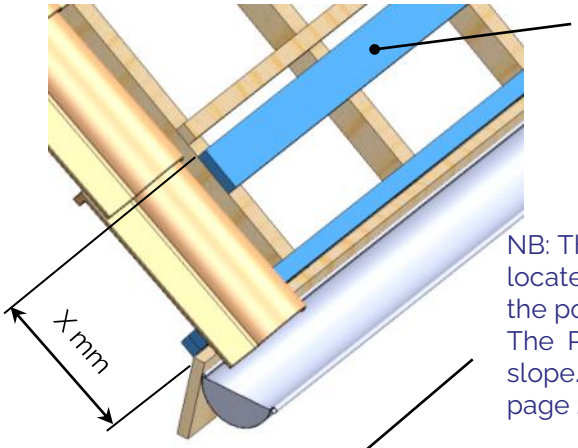

Reference support board (d)

NB: The lower part of the PV field (along the guttering) must be located on the same plane as the system planking. Otherwise the positioning dimension of X mm will no longer be applicable. The PV field needs to be raised in the direction of the roof slope. The positioning dimension needs to be redefined, see page 21.

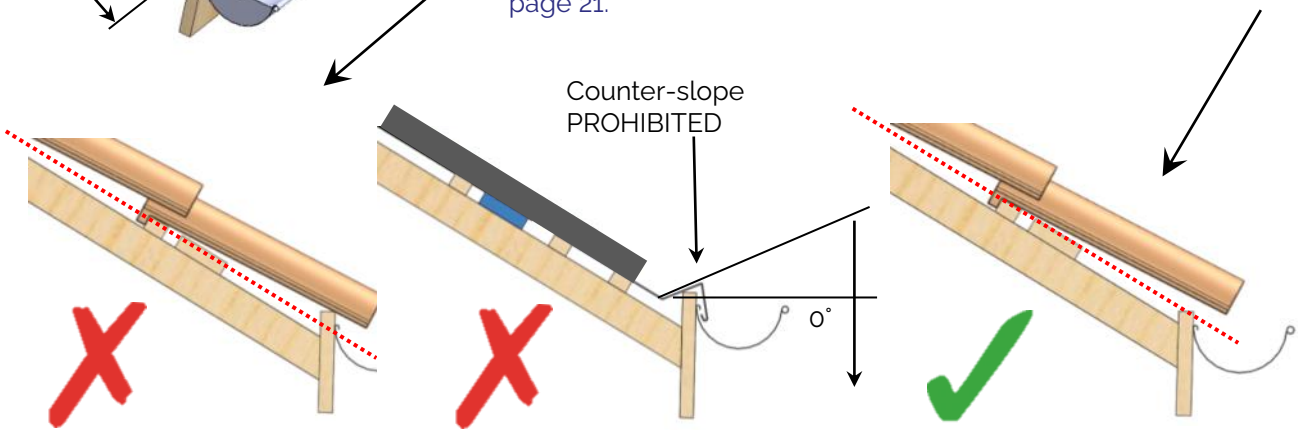

7.2.3) Specific positioning of the planking along the guttering

The lower part of the PV field (along the guttering) must be located on the same plane as the system planking. Otherwise the positioning dimension X mm (dimension provided by the module manufacturer) will no longer be applicable. The PV field needs to be raised in the direction of the roof slope. The positioning dimension needs to be redefined.

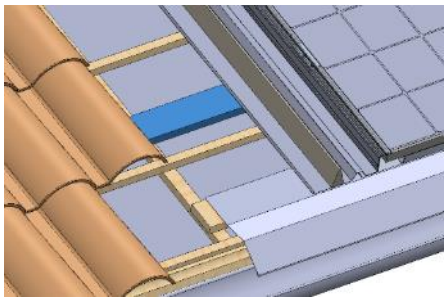

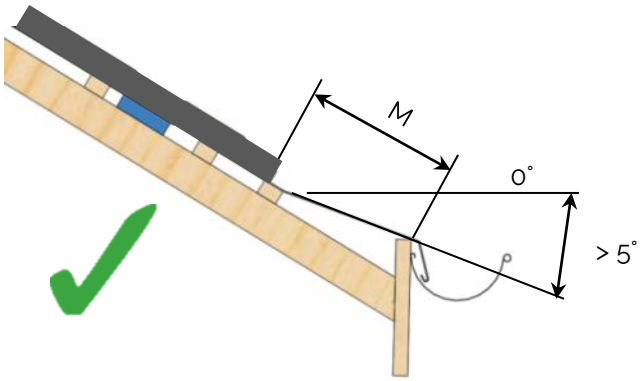

"M" to be measured on the roof according to the conditions described here

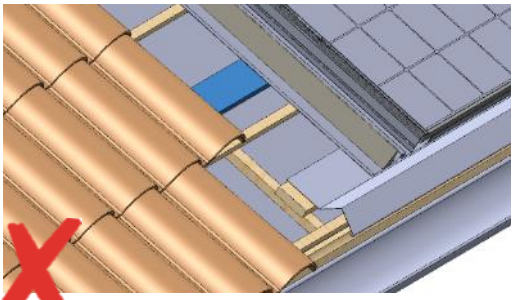

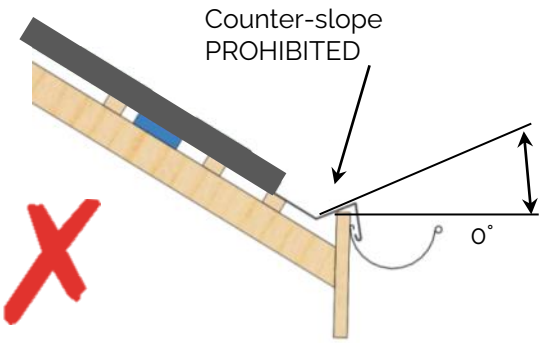

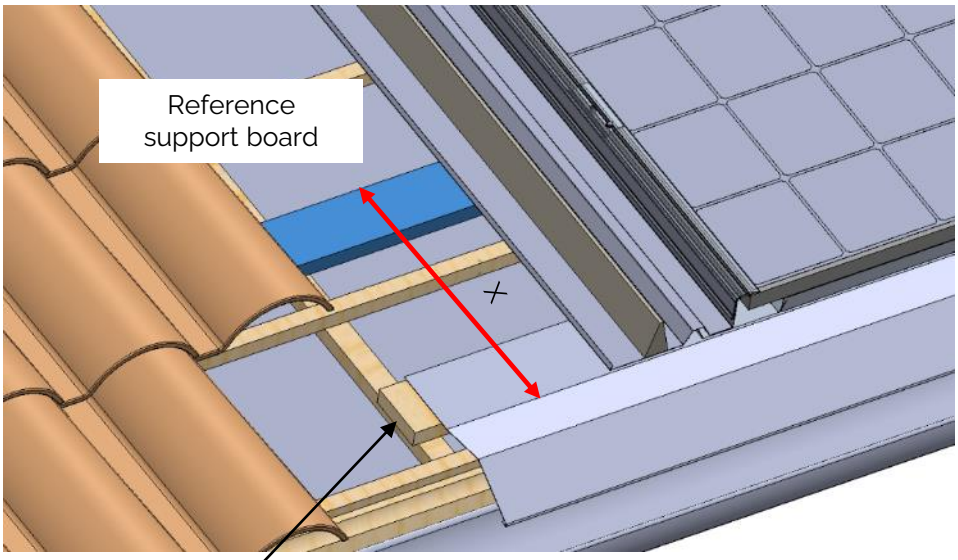

7.2.4) Installation of the PV field lower, custom-made, metal plate

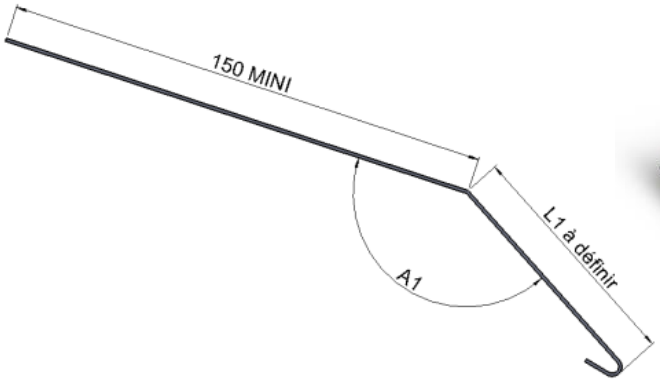

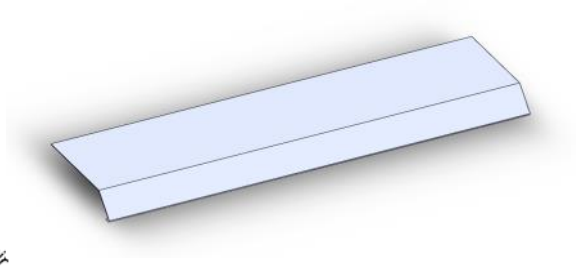

For the creation of the lower metal plate, angle A1 is equal to 115˚ + the tilt angle of the roof undergoing work. Example: A1 = 115˚ +30˚ = 145˚
Dimension L1 is defined by the position of the guttering on the roof undergoing work. Define L1 so that the lower edge of the metal plate is at least 20 mm in the guttering.
NB: this type of metal plate is only applicable for a PV field flush with the guttering.

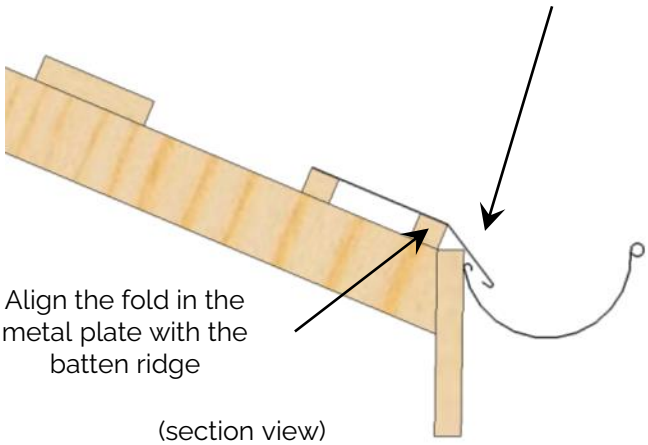

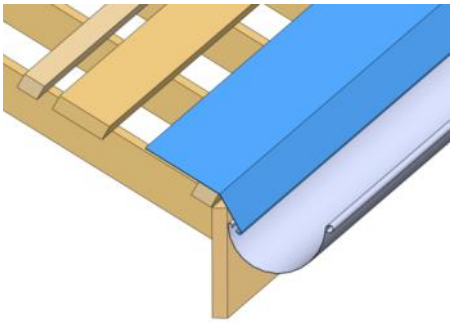

The length of the metal plate may vary. If the bottom of the roof consists of several metal plates, they must overlap by MIN 100 mm when installed.

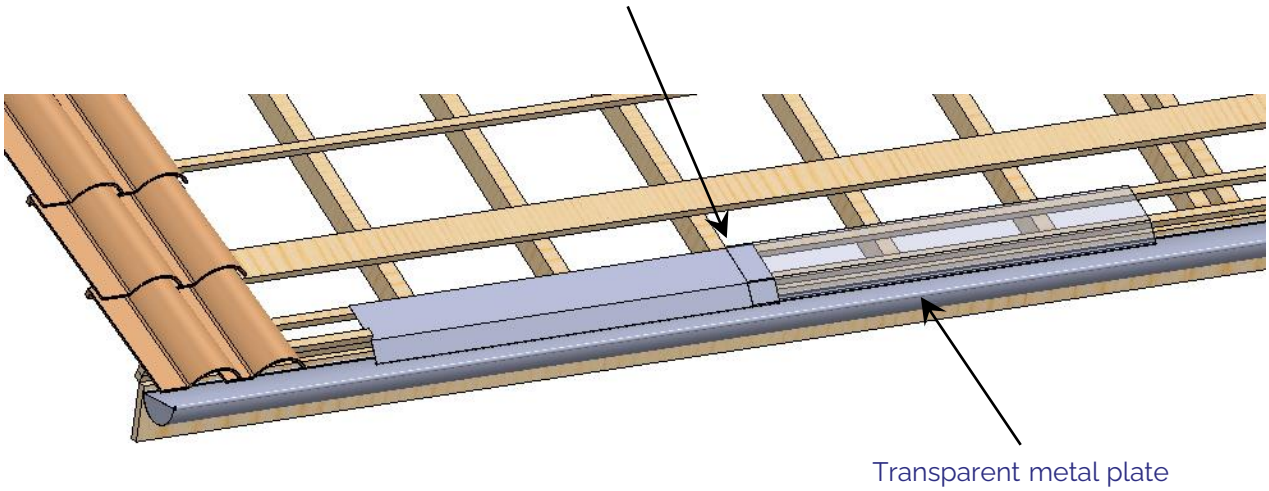

Add a batten or a board underneath the flat part of the metal plate to create a support for the latter. This wood should be at least as wide as the PV field used. The thickness of the wood used to create the support for the metal plate must be identical to that of the support boards (d).

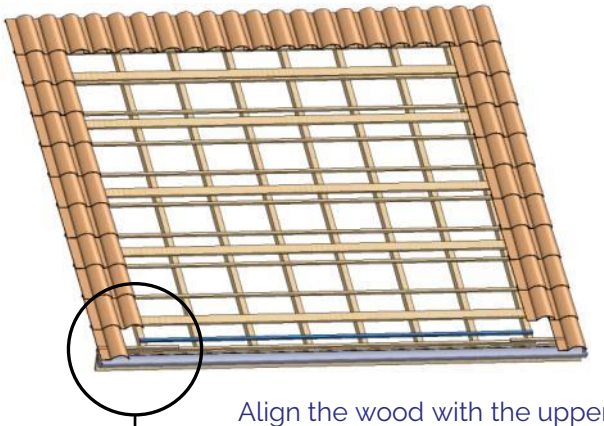

Align the wood with the upper edge of the metal plate

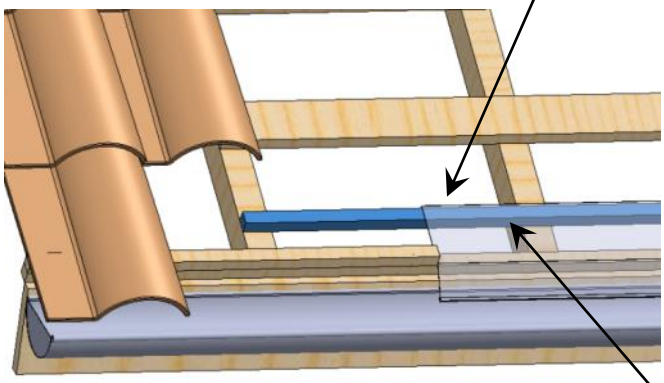

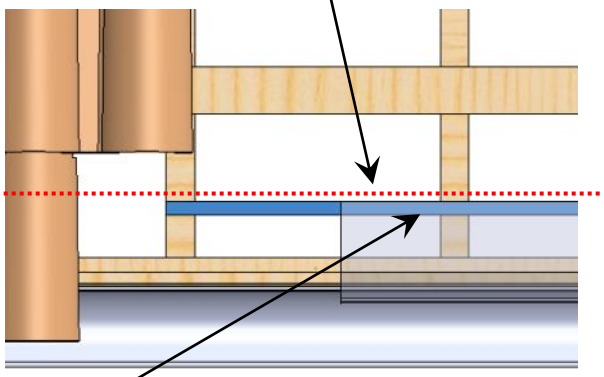

(top view)

Transparent metal plate

Position and staple the metal plates to the bottom of the roof over the entire width of the PV field. Only staple to the top part of the metal plate.

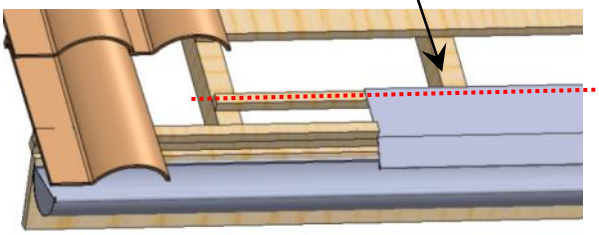

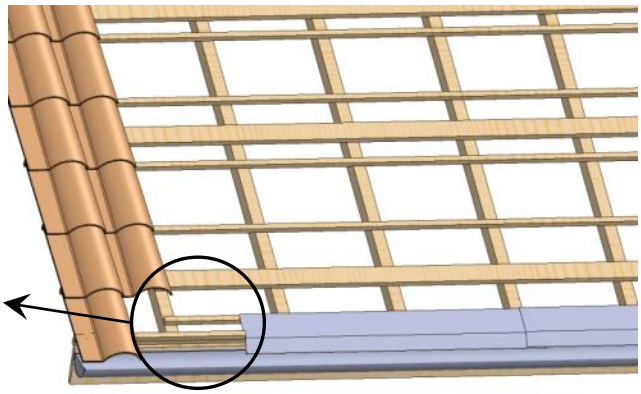

7.3)Installation of the PV field planking for all types of installation

The length "L" of the support boards (d) to be used must cover the entire width of the PV used. The "L" value can be obtained from the table on page 12 of this document.
If necessary, battens of a sufficient length can be added to this "L" dimension so that the ends of the battens are supported by a truss on either side.

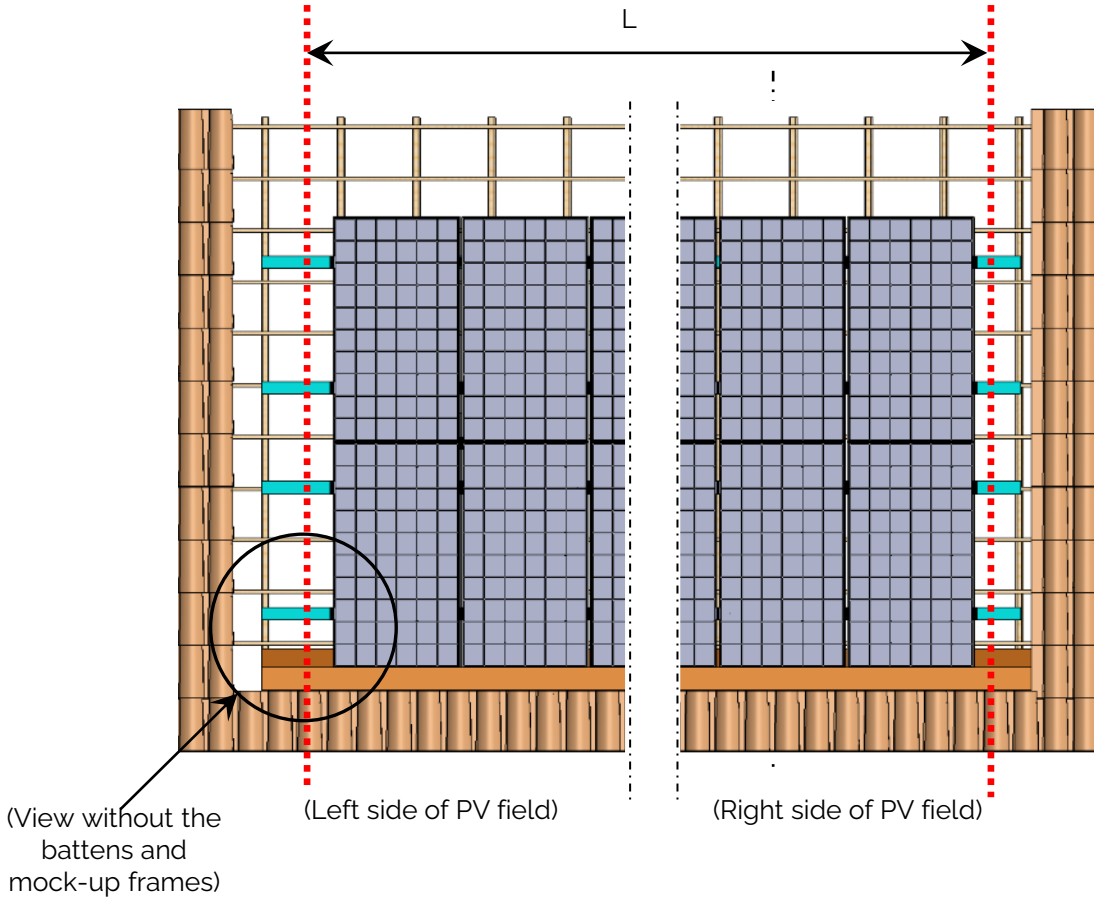

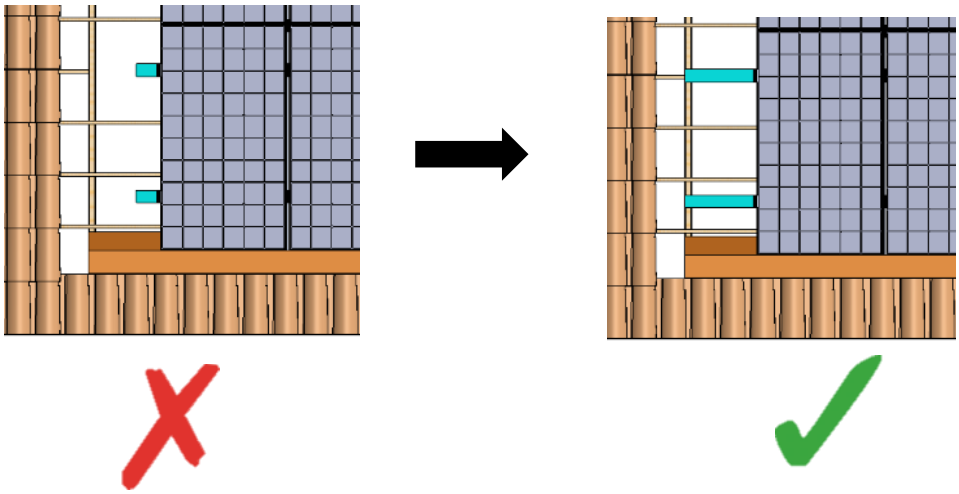

7.3.1) Planking for assembly with 4 fixing brackets

Install the horizontal planking to support the frames with the number of (d) boards being equal to (2 x No. vertical PV modules) + 1 at the top to attach the top flashing plate of the PV field. When screwing the board, follow the recommendations on pages 16 to 19 to determine the type and number of screws to be used on each supporting crosspiece. If the roof undergoing work is battened, remove the battens that are located where the support boards are to be installed.

Step 1: Position and screw the 2 boards on the first photovoltaic module according to the dimension X recommended by the PV module manufacturer and the length of the module.
Step 2: Position and screw the 2 boards on the second photovoltaic module according to the dimension X recommended by the PV module manufacturer and the length of the module.
Step 3: Repeat step (2) for the additional lines.
Step 4: Position and screw the board supporting the top flashing plate 550 (flashing 10° type) or 417 mm (flashing 17° type) from the previous module.
Step 5: Position and screw the first channel supporting batten 2020 from the bottom of the modules for module length up to 1790 mm, respectively 2140 for module length between 1791 and 1940 mm.
Step 6: Repeat step (5) for the additional lines. (Adjustment 2020 or 2140 depending on PV module length)
Step 7: Screw the last channel supporting batten 250 mm from the last board.

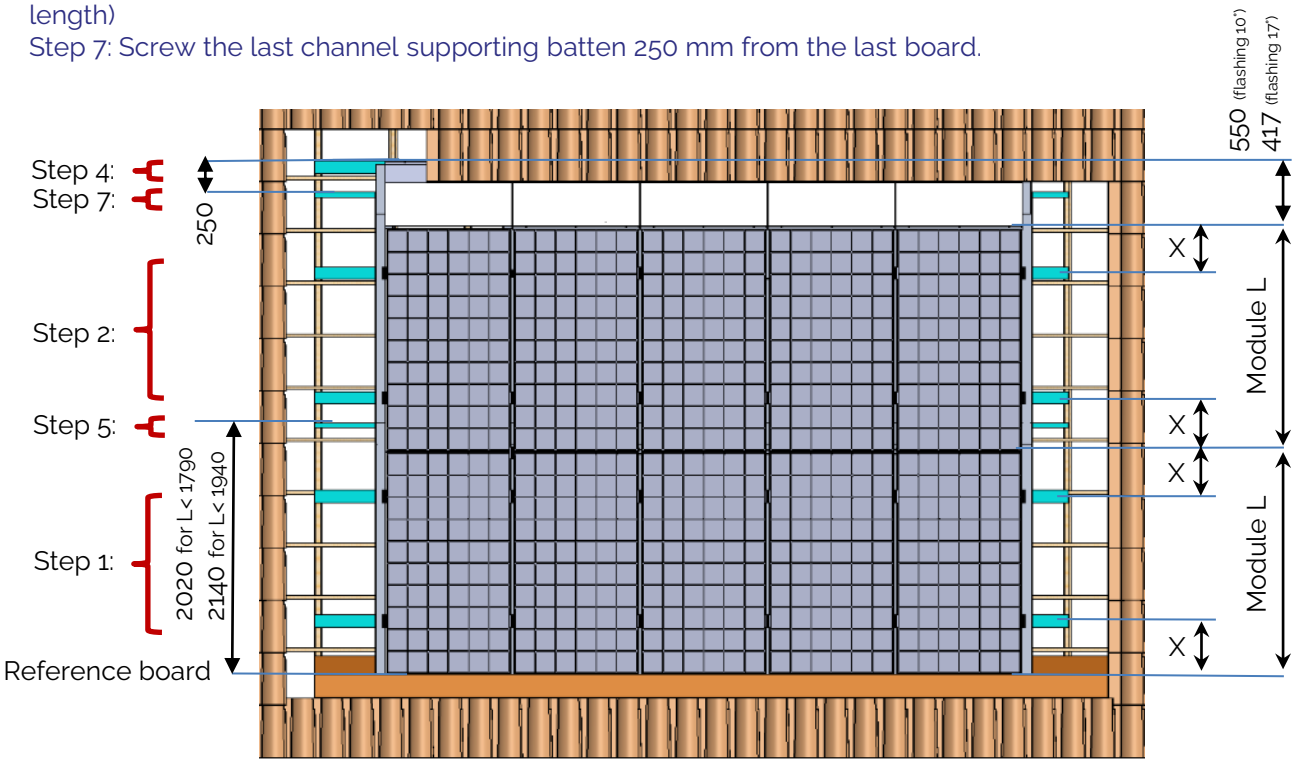

Dimension X provided by the module manufacturer

1 supporting batten mandatory between each board approximately in the centre

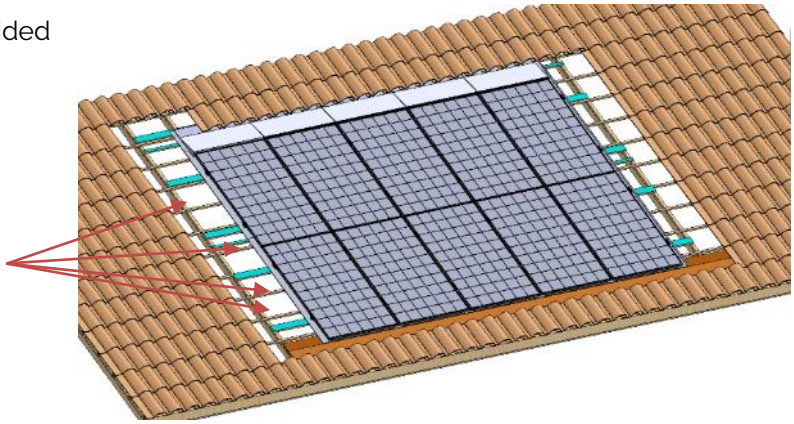

7.3.2) Planking for assembly with 6 fixing brackets

Install the horizontal planking to support the frames with the number of (d) boards being equal to (3 x No. vertical PV modules) + 1 at the top to attach the top flashing plate of the PV field. When screwing the board, follow the recommendations on pages 16 to 19 to determine the type and number of screws to be used on each supporting crosspiece. If the roof undergoing work is battened, remove the battens that are located where the support boards are to be installed.

Step 1: Position and screw the 3 boards on the first photovoltaic module according to the dimension X recommended by the PV module manufacturer and the length of the module.
Step 2: Position and screw the 3 boards on the second photovoltaic module according to the dimension X recommended by the PV module manufacturer and the length of the module.
Step 3: Repeat step (2) for the additional lines.
Step 4: Position and screw the board supporting the top flashing plate 540 mm (flashing 10° type) or 417 mm (flashing 17° type) from the previous module.
Step 5: Position and screw the first channel supporting batten 2020 from the bottom of the modules for module length up to 1790 mm, respectively 2140 for module length between 1791 and 1940 mm.
Step 6: Repeat step (5) for the additional lines. (Adjustment 2020 or 2140 depending on PV module length)
Step 7: Screw the last channel supporting batten 250 mm from the last board.

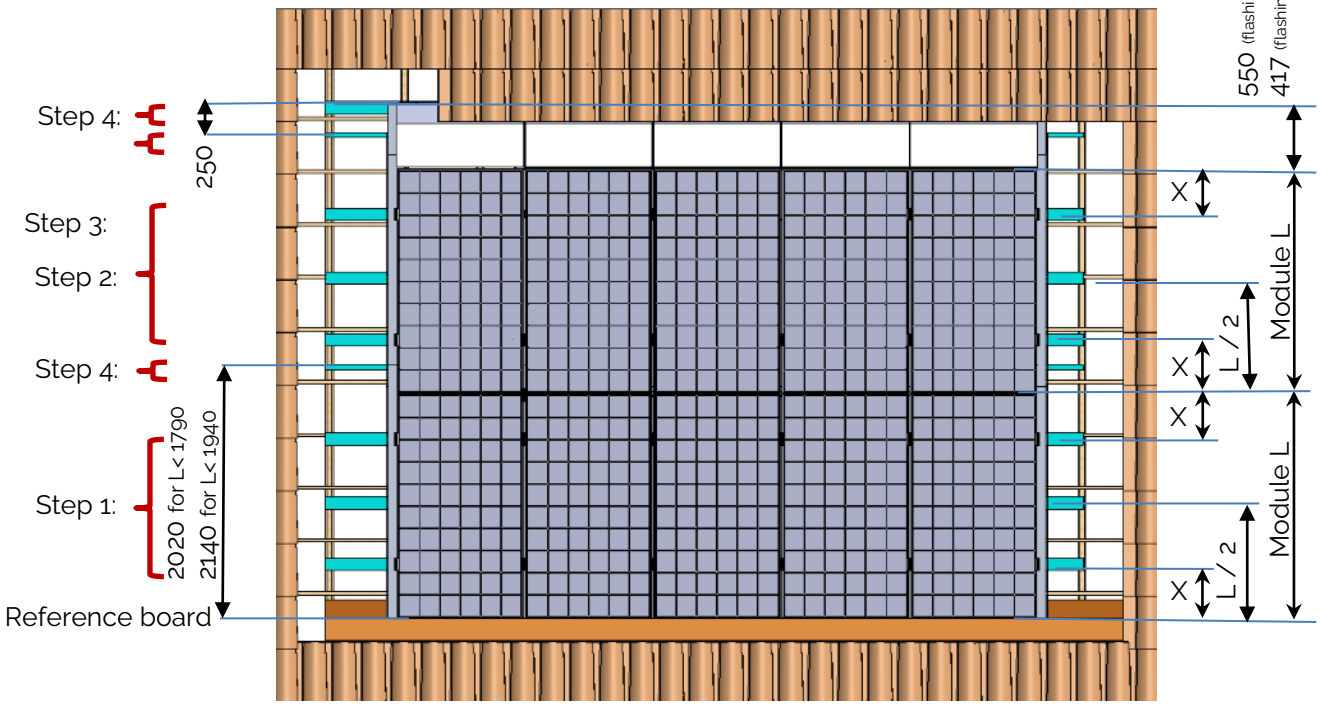

Dimension X provided by the module manufacturer

1 supporting batten mandatory between each board approximately in the centre

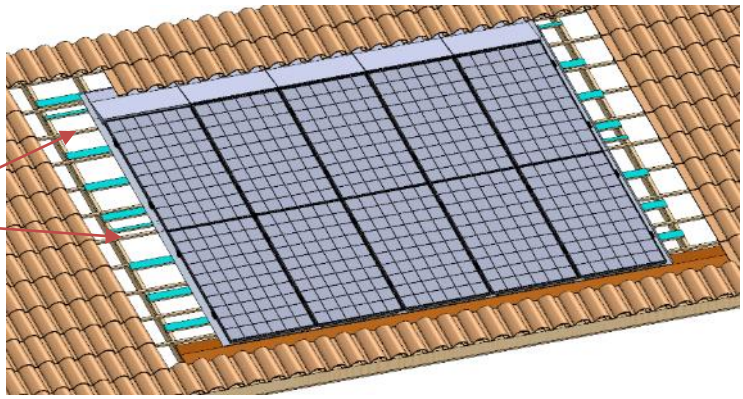

7.4) Installation of the EASY ROOF METAL system

This section of the assembly instructions concerns all PV field installations at the centre of the roof slope or along the guttering

7.4.1) Installation of the breather membrane

We require the installation of a breather membrane before the EASY ROOF METAL integration system is put in frame place. Add the breather membrane if it does not already exist.
The installation of the membrane is described in a document entitled "INSTRUCTIONS AND INSTALLATION OF THE BREATHER MEMBRANE" which is available from the manufacturer of the EASY ROOF METAL frame system. Refer to this document to ensure that the installation is compliant.

7.4.2) Installation of the EASY ROOF METAL system

1°) Installation of the first row of end brackets [2].

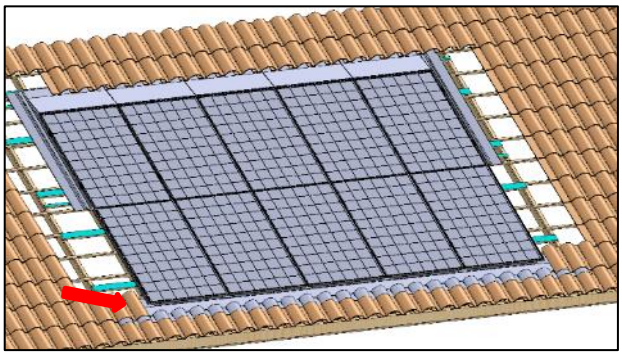

Reposition the first tile in the bottom left-hand corner, position the first end bracket [2] at a MAX distance of 40 to 80 mm from the edge of the tile.

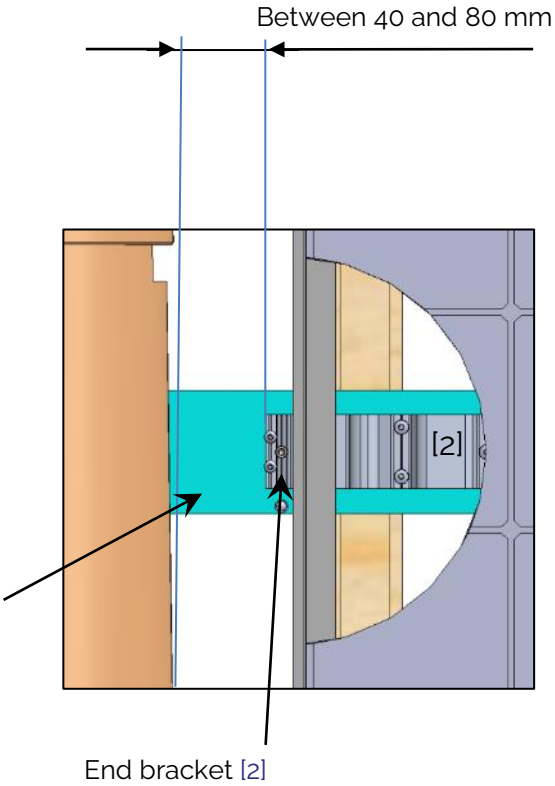

Align and screw the end brackets [2]

Screw the 3 stainless steel 6x40 screws [18]

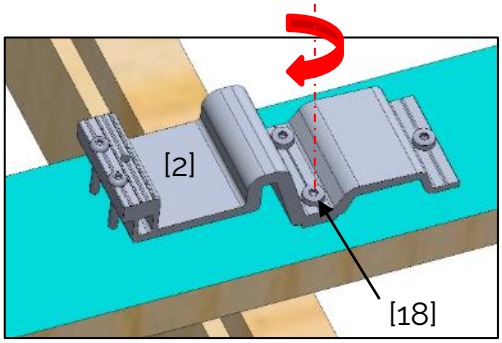

2°) Middle brackets installation [1]

Use the tool [25] to set the system adjustment.
NB: insert the raw trays [10] under the middle brackets [1] (fig. 1) if possible before assembling the upper lines.

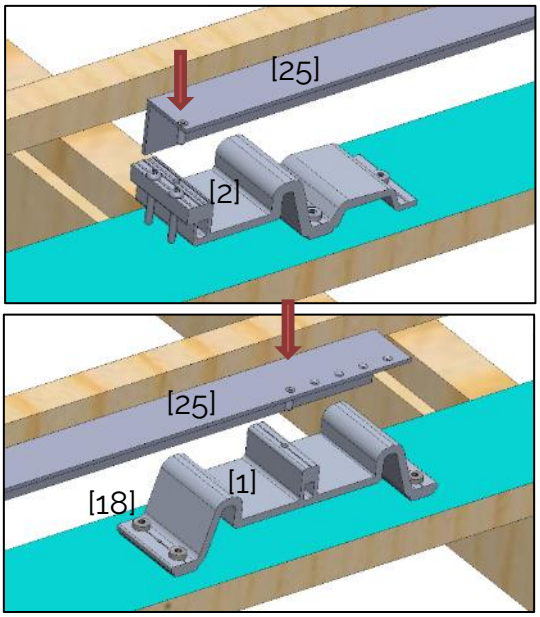

Set the tool [25] according to the adjustment before use (Adjustment: see pages 10 to 13).

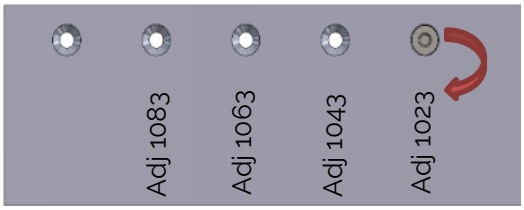

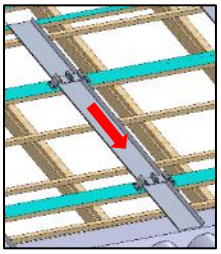

(Fig. 1)

Place the tools on the end bracket [2] and then on the middle bracket [1] to be screwed. Tighten the 4 screws [18].
Repeat with the other middle brackets.

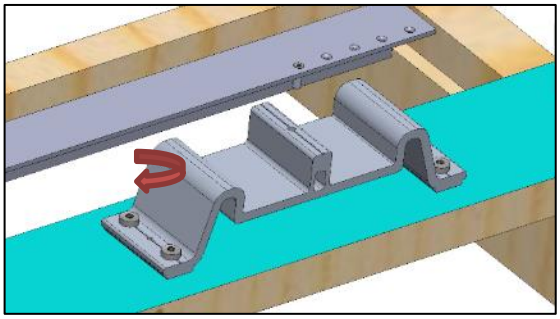

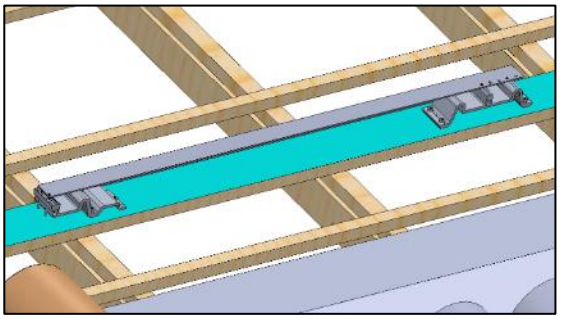

The tools are mandatory for the assembly of the brackets [1] and [2]

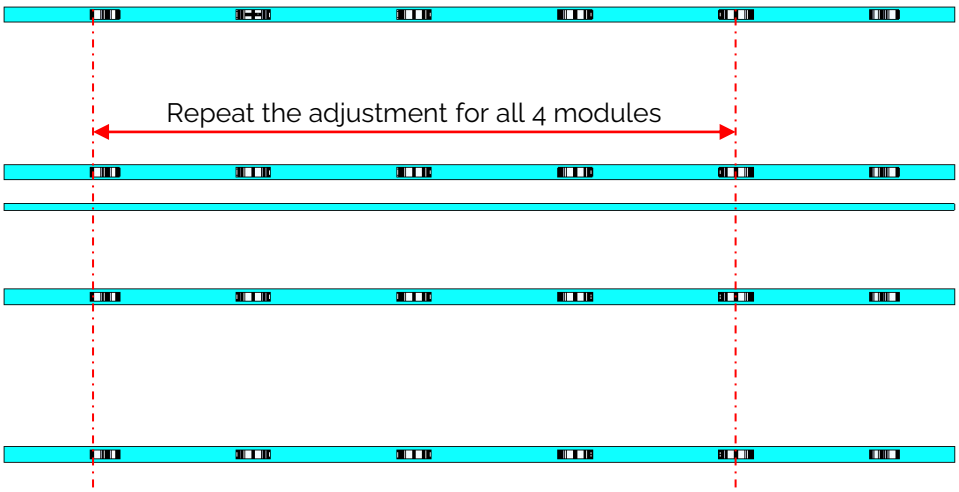

3°) Trays assembly [10]

Assemble the raw trays [10] at the bottom of the PV field and screw in the upper section with Ø5 wood screws.

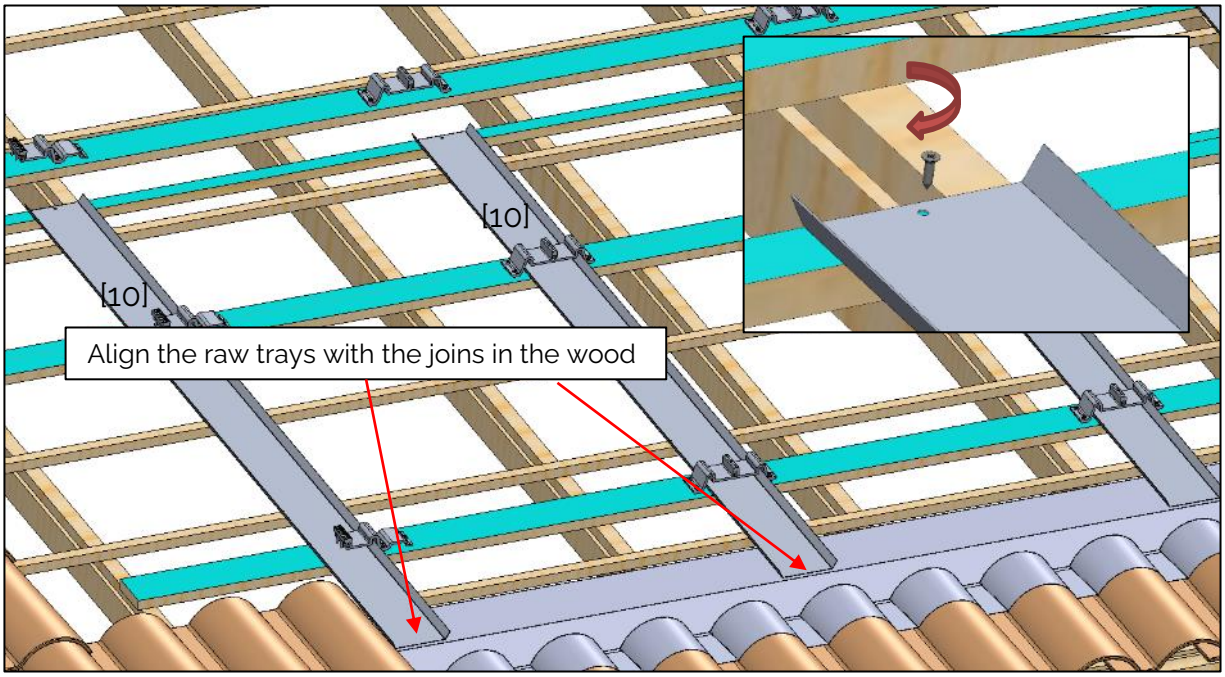

Assemble and screw the upper raw trays [10] in the upper section with Ø5 wood screws.
(Cover the lower raw trays over min. 150 mm)

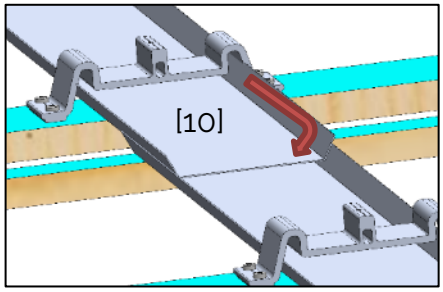

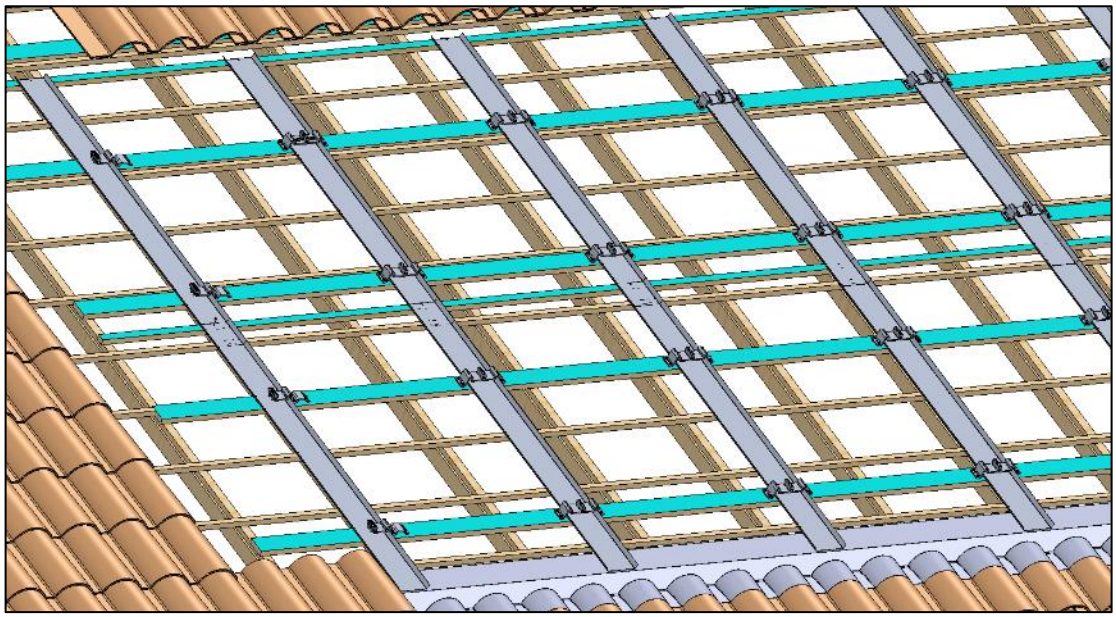

Assemble and screw the superior trays [11] in the upper section with Ø5 wood screws.

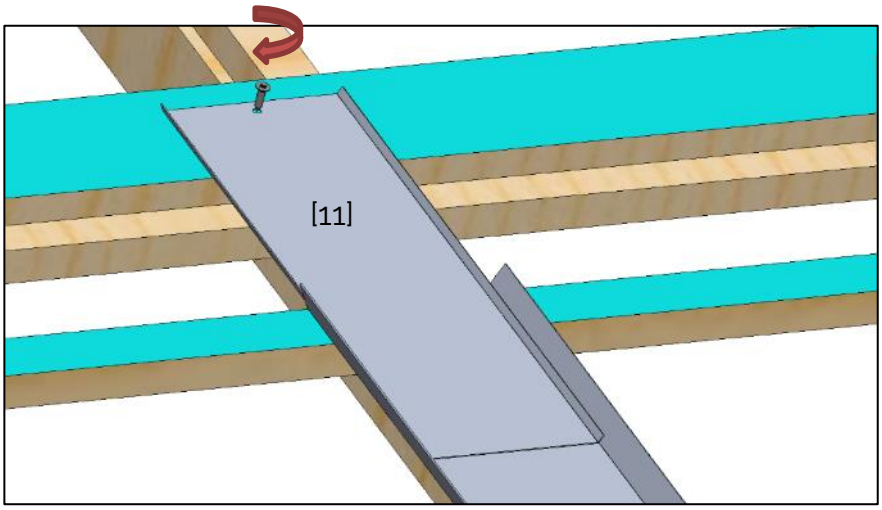

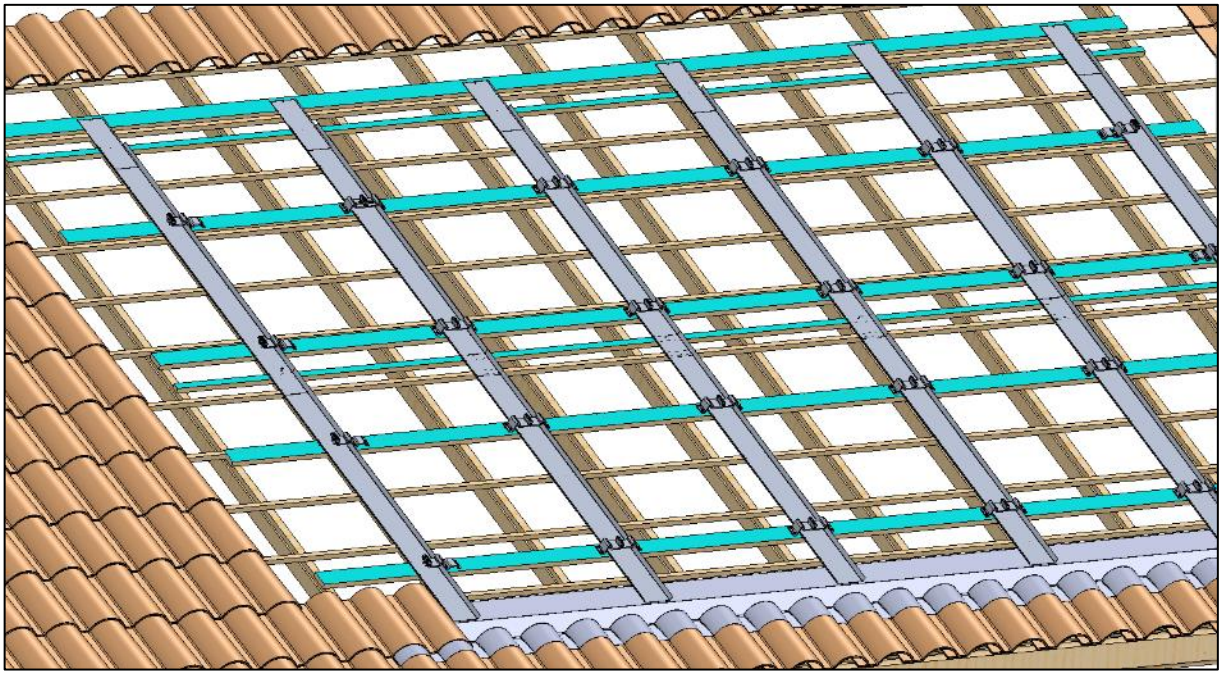

4°) Low gates [12] assembly

Assemble 2 low gates [12] per module width.

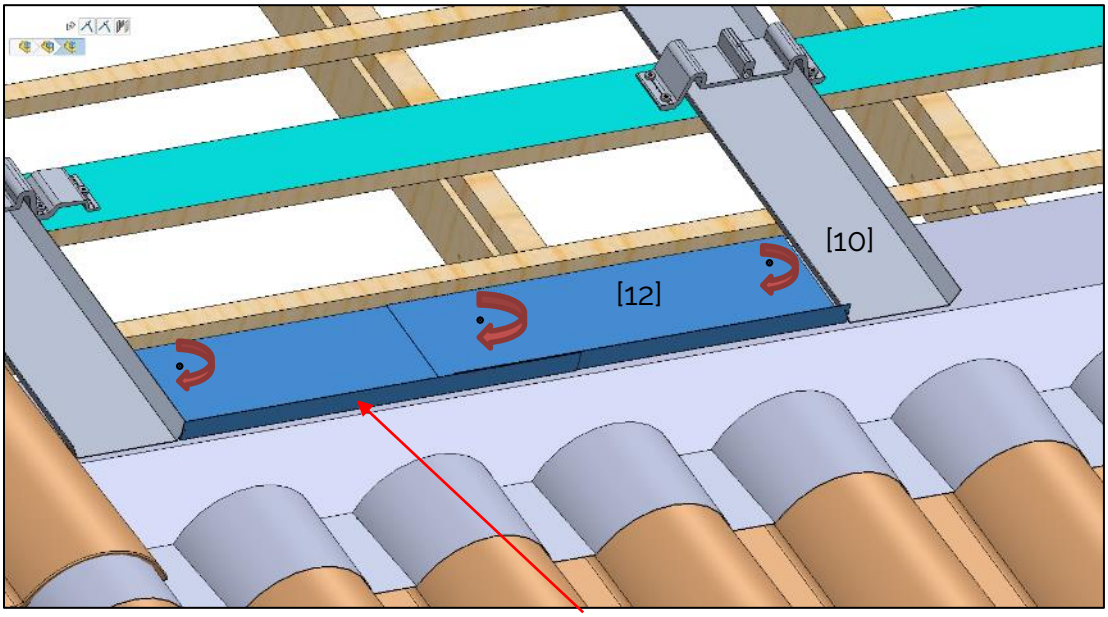

Align the 2 low gates [12] with the trays [10] and separate them as far as possible up to the trays.
Attach on the upper section with Ø5 wood screws.

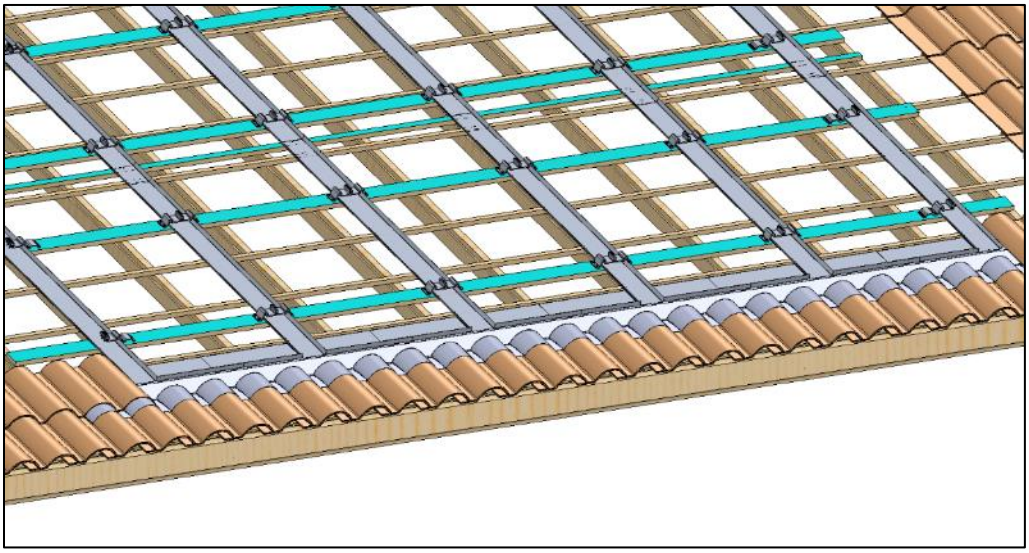

Grounding preparation for the PV modules

To ground the PV module, several solutions are possible:

a) Method 1
Connect the ground wire to one double fixing bracket (7) for two PV modules.

It is possible to ground both the PV module and the double fixing bracket (7) by using an EASY GROUNDING (www.edilians.co.uk)

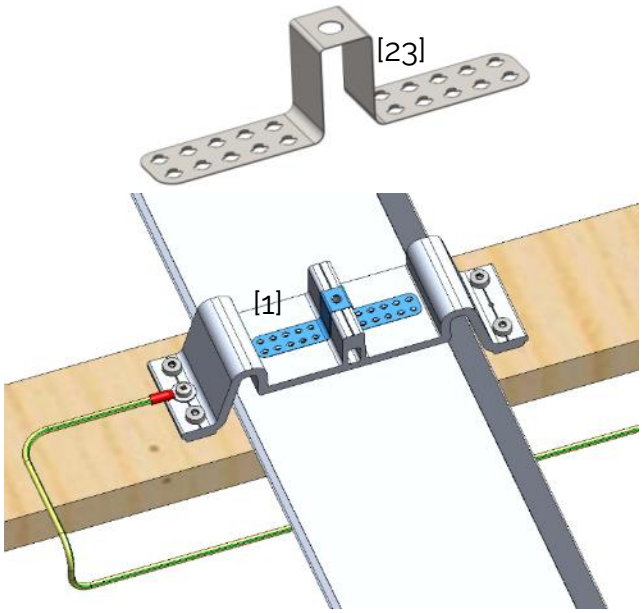

There are two ways of wiring the PV field earth, depending on the regulations in force in the country.

Possibility 1 (France)

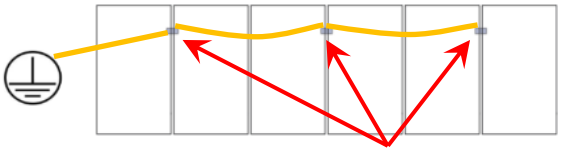

one earthing part every two modules + cabling

Possibility 2

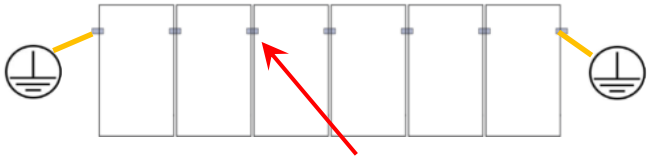

one earthing part on every module without cabling

b) Method 2
Connect the ground wire directly to the PV modules.

Link the PV modules directly to the grounding wire using the holes provided by the constructor underneath the module.

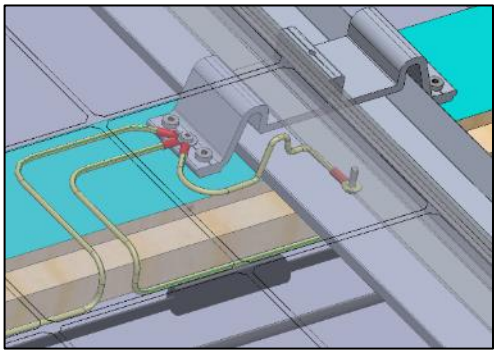

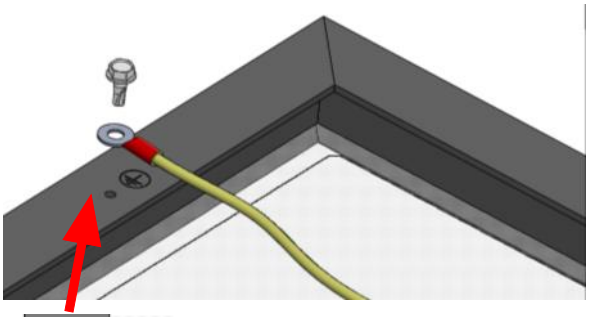

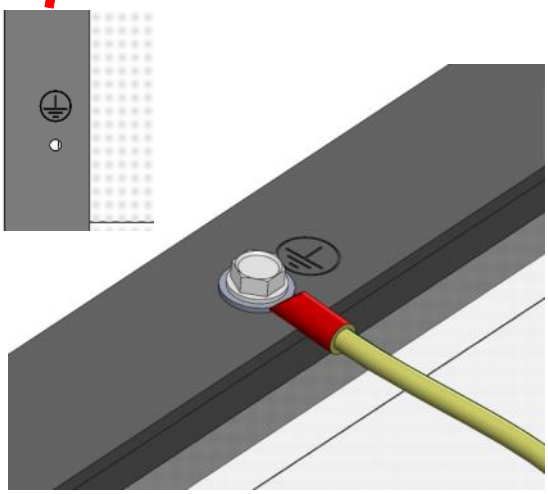

5°) Crossing assembly.

Prepare the adjustable crossing members.
Insert the 2 Adjustable junction flow [6] parts on the crossing [5]

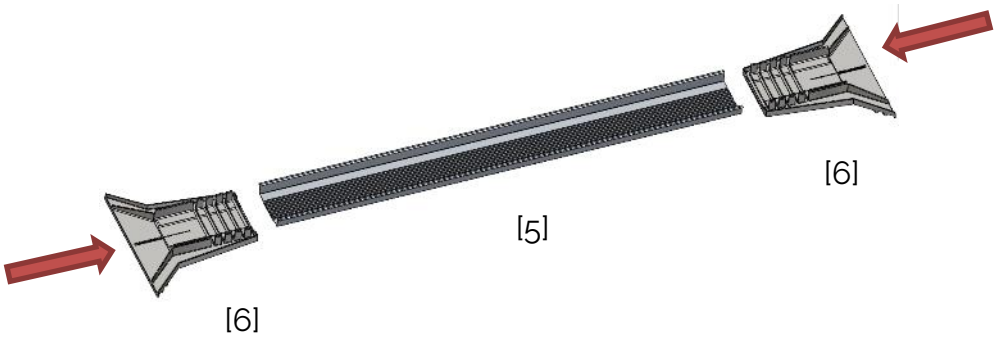

Prepare the top adjustable crossing members.
NB: Only at the top of the field.

Portrait installation : insert the 2 Adjustable junction flow [6] parts and the 2 deflector fixing parts [7] on the top crossing [5]

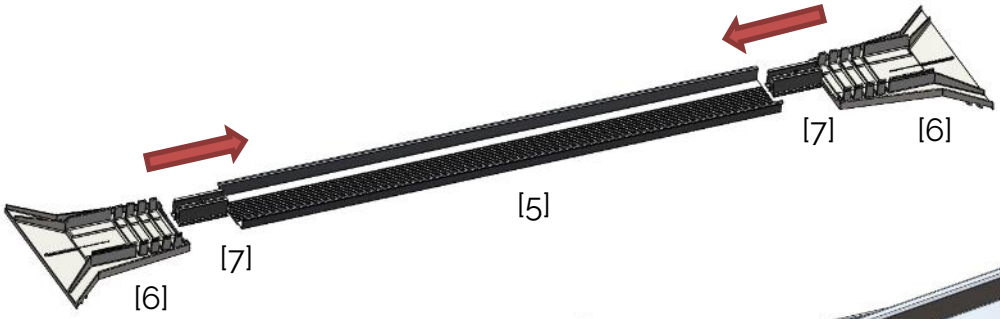

Make sure that the module fits
in the space limited
by the deflector fixing part [7]

Symmetrically position the assembled crossing members [5 + 6] on the trays [10].

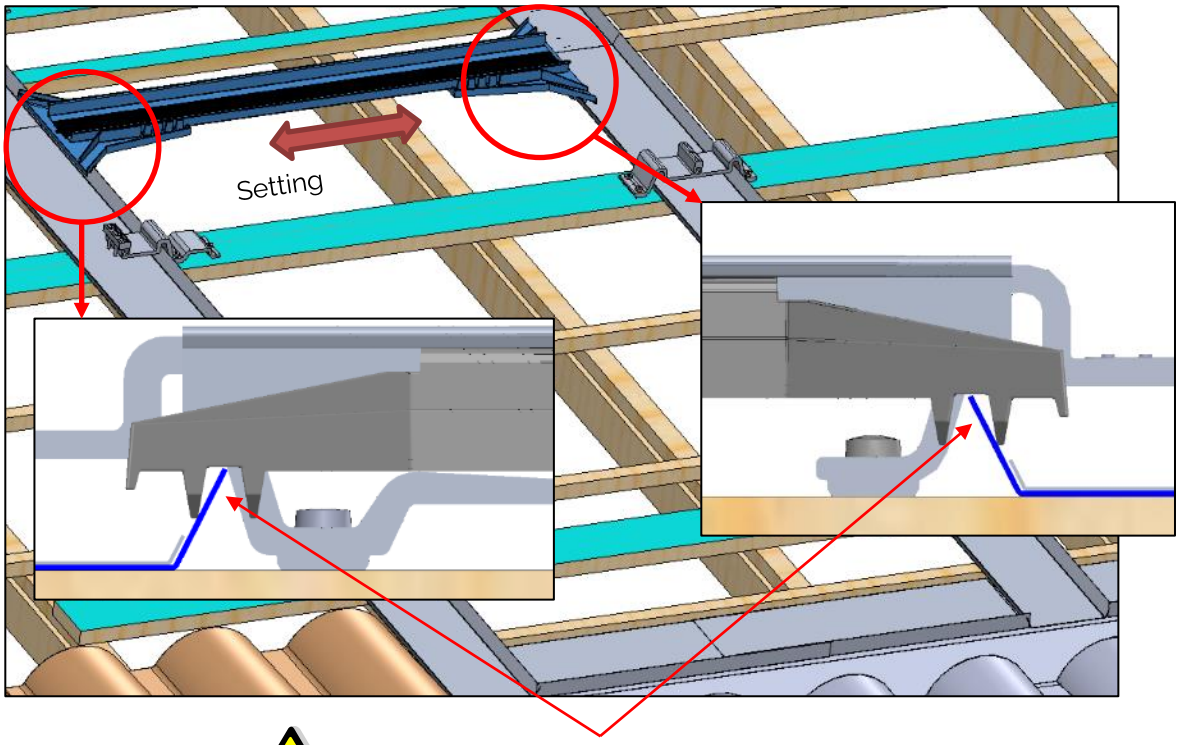

1 notch on each side of the batten.

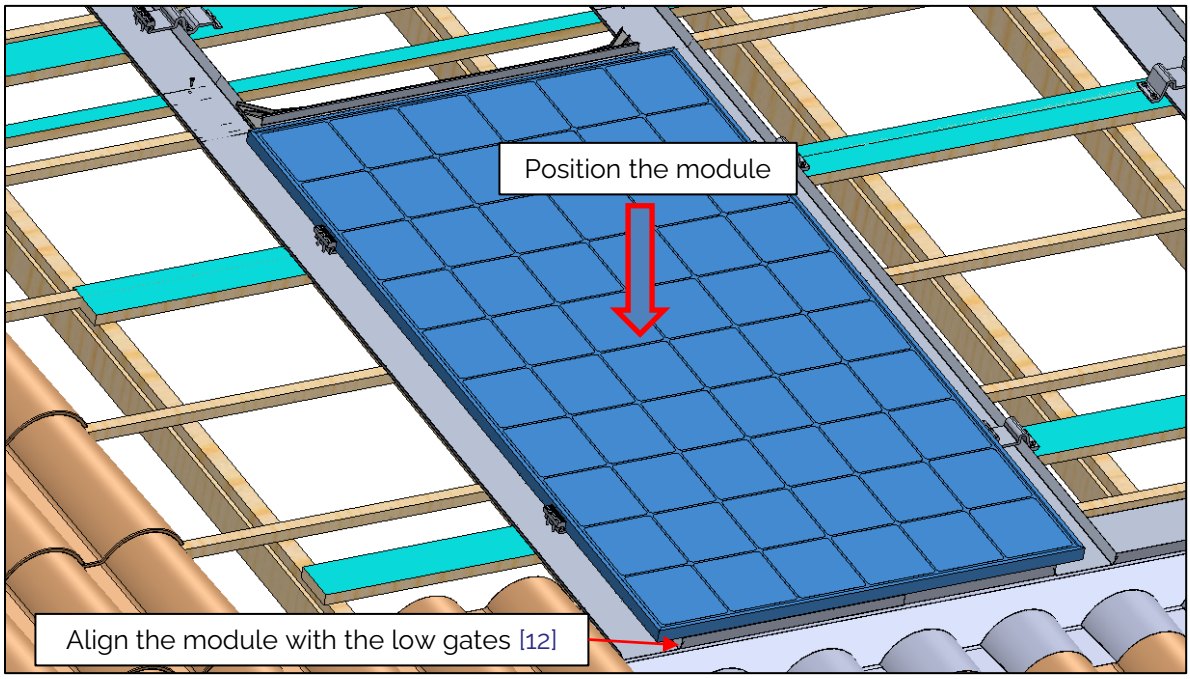

6°) Assembly and tightening of end clamps [4].

Adjust the height of the M5x25 tb support screws of the end brackets [2] at 3 mm from the edge of the frame of the PV module.
Position and screw the M6x25 or M6x30 screw [17] according to the thickness of the PV module on the clamp [4] (8 Nm maximum)

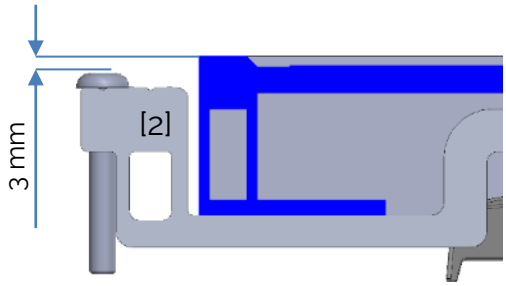

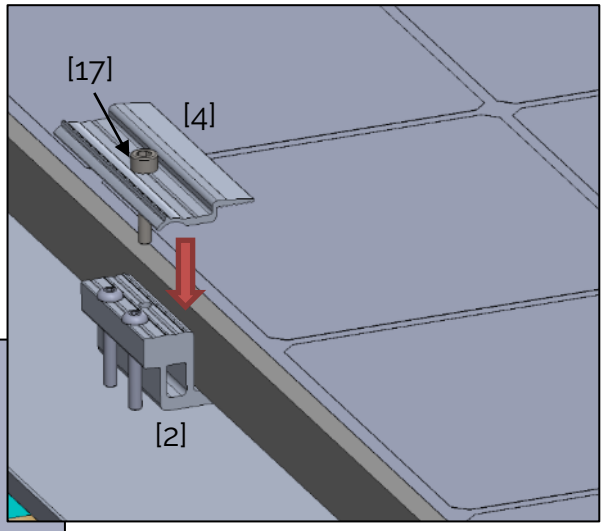

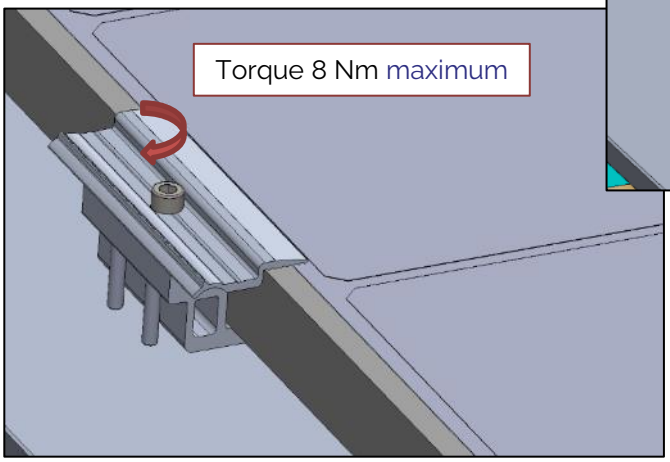

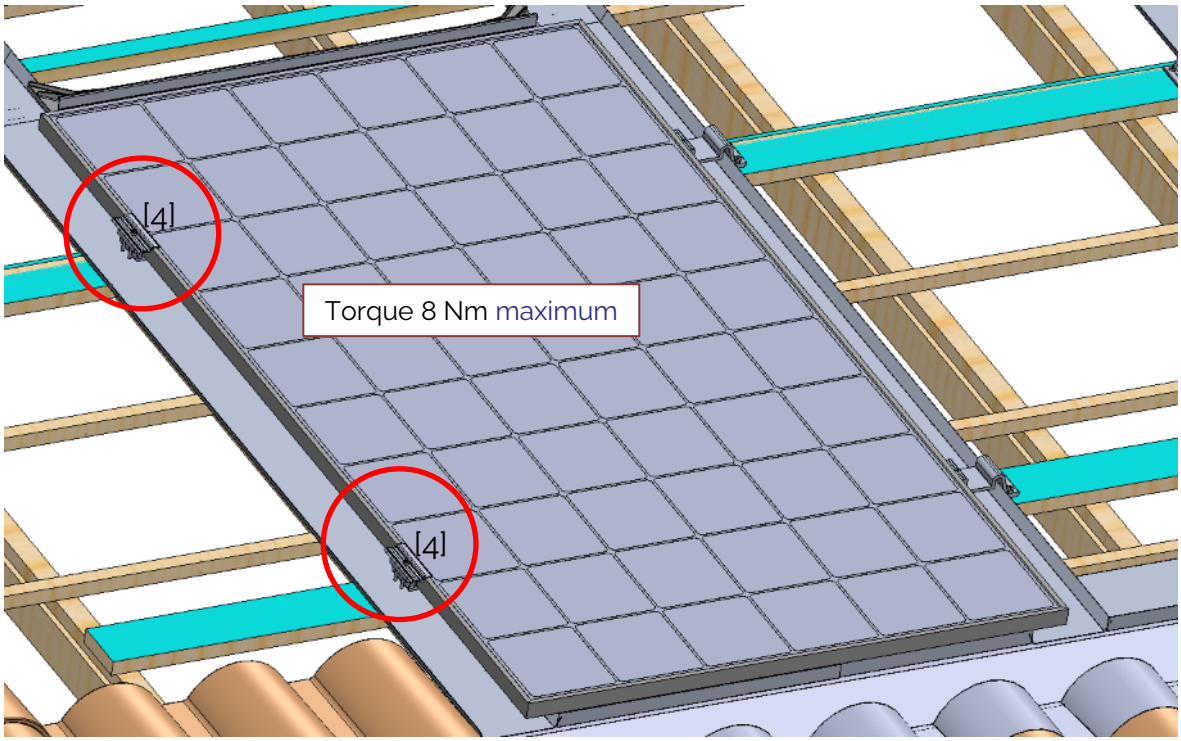

7°) Assembly of middle clamps.

Position the assembled crossing member [5 + 6] and the second PV module.

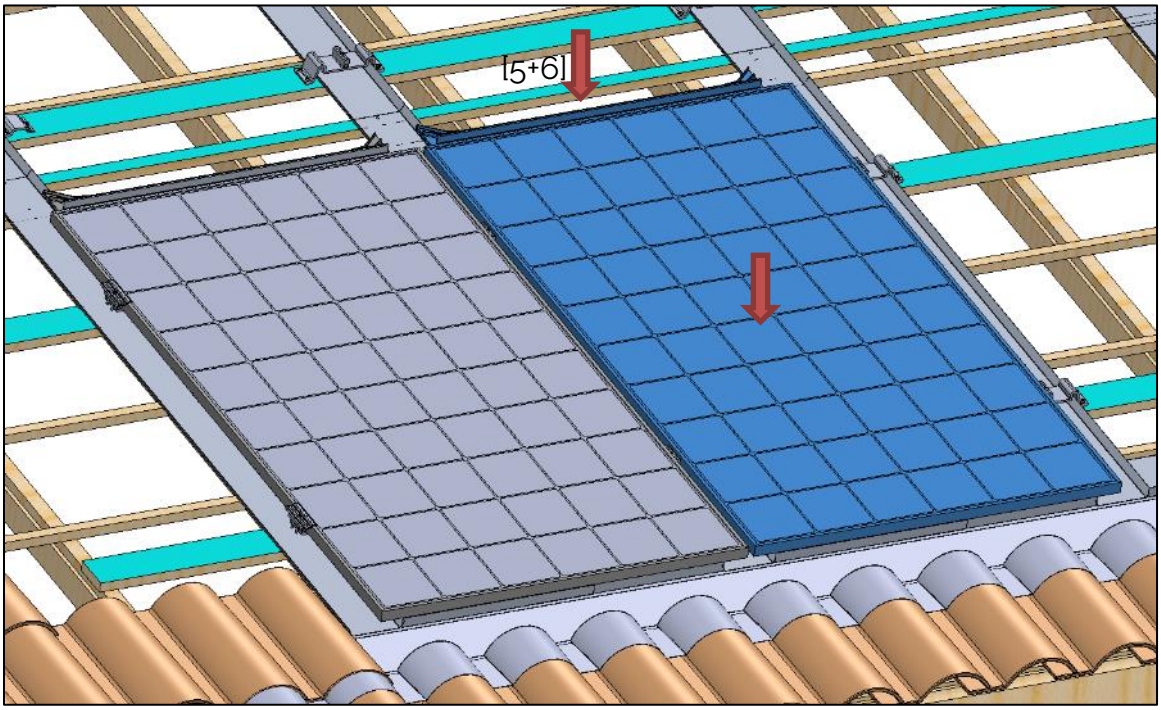

Screw the middle clamps [3] with M6x25 or M6x30 screws [17] according to the thickness of the PV module and tighten (8 Nm maximum) .

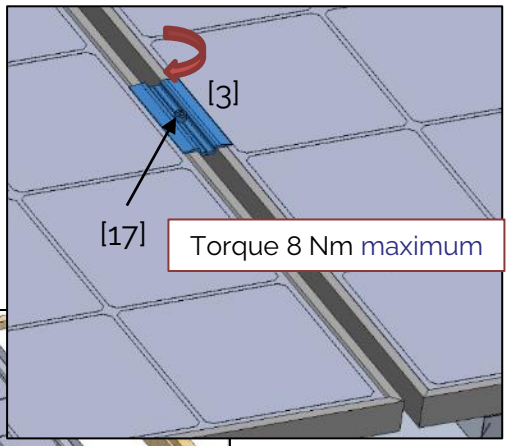

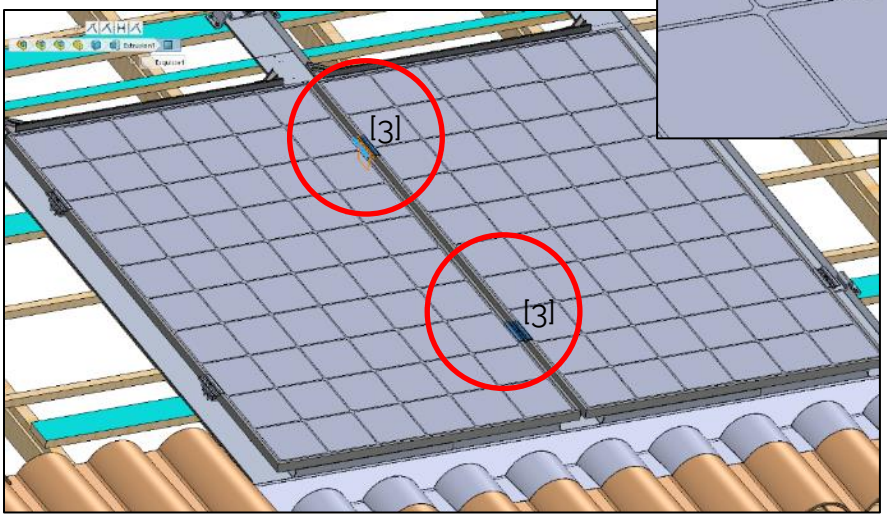

8°) Complete the assembly of the first module row.

Position the assembled crossing members [5 + 6], the PV modules and then the middle and end clamps [3] and [4] at the end of the line.

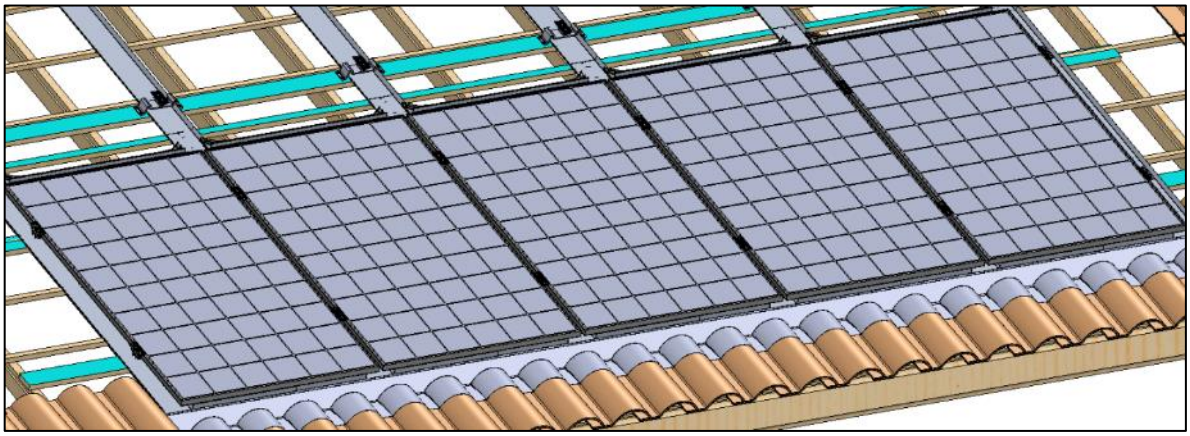

Screw the end and middle clamps [3] and [4] with M6x25 or M6x30 screws [17] according to the thickness of the PV module, and tighten (8 Nm maximum)

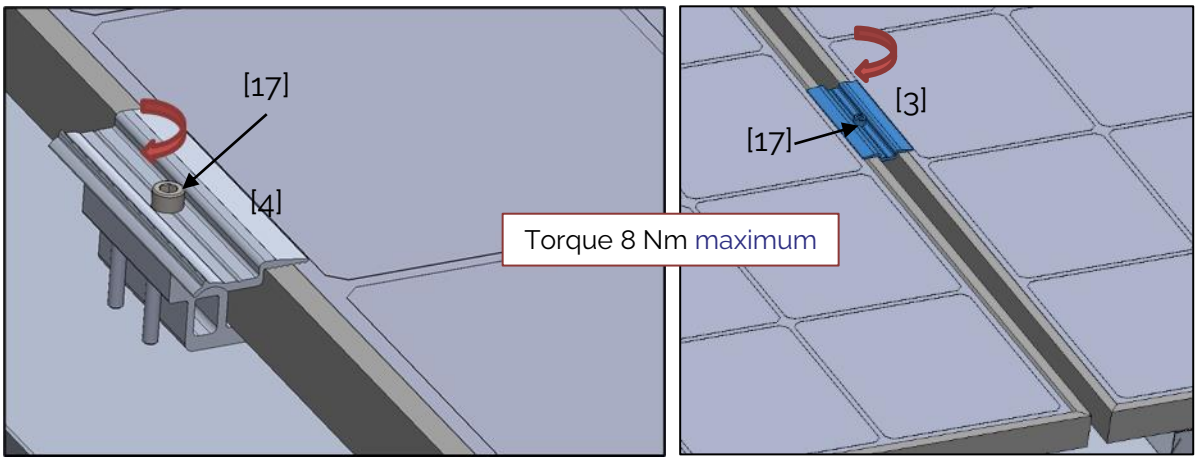

Stick the Compriband foam (15/1-3) [22] to the top of the modules.
Implement the Compriband between each row of modules.

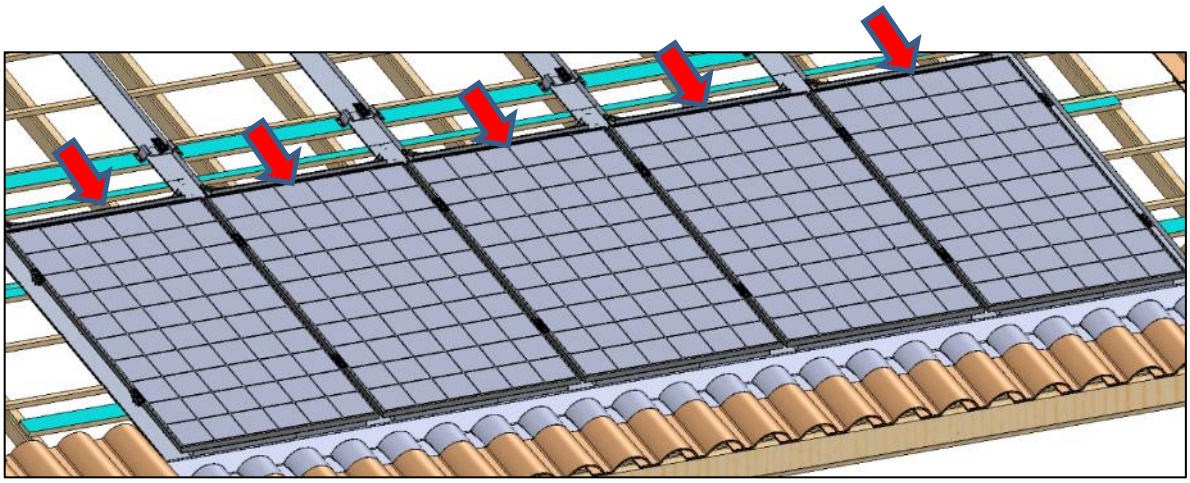

Stick the Compriband [22] 2 mm from the edge of the frame and along the module width.

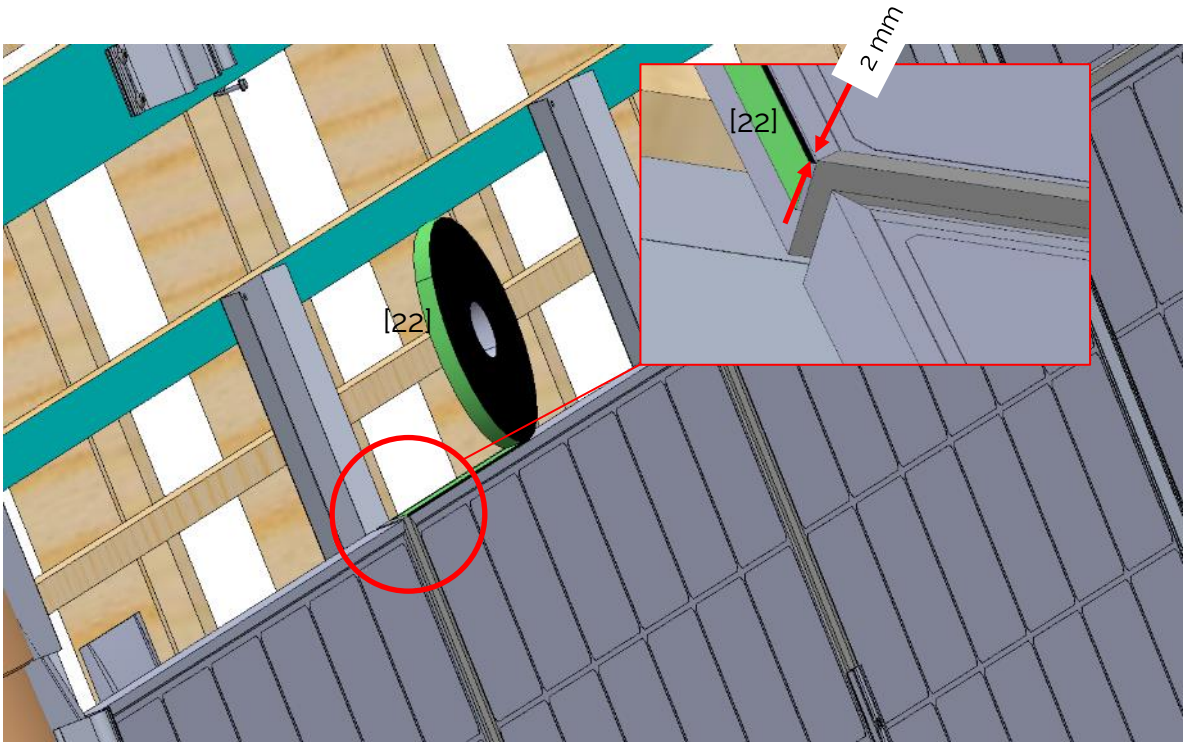

9°) Assembly of the 2nd module row (top).

Assemble the top assembled crossing members [5 + 6 + 7], the first PV module of the top line and then the end clamps [4].
Tighten clamp screws [17] to a torque of 8 Nm maximum.

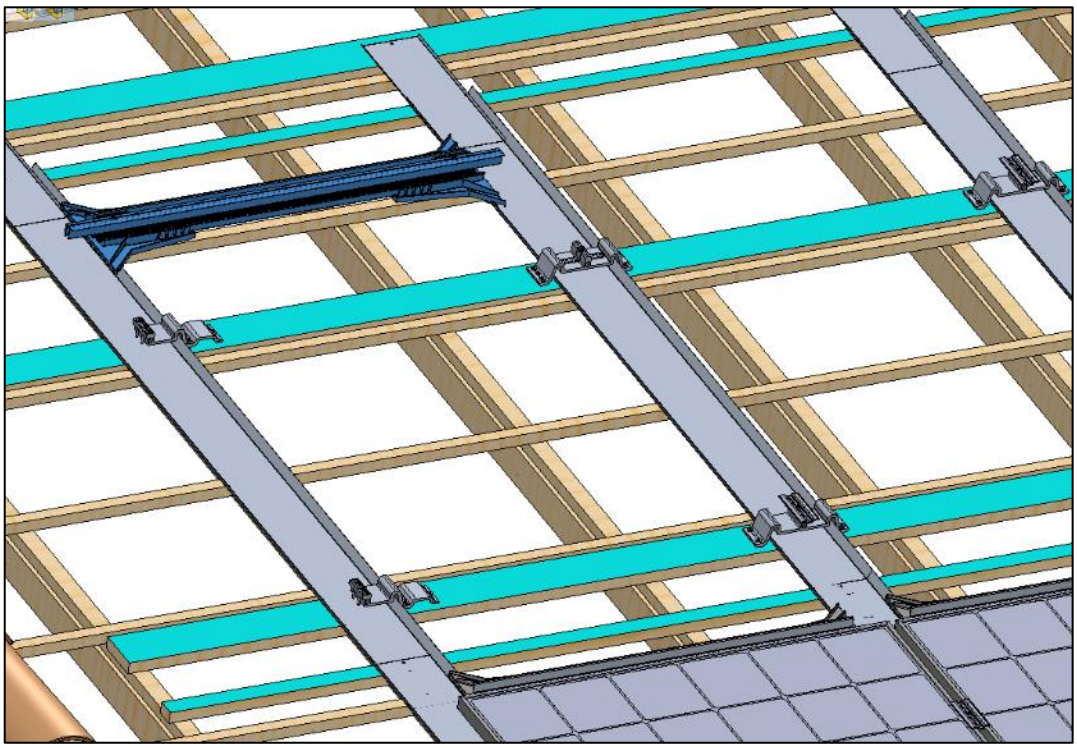

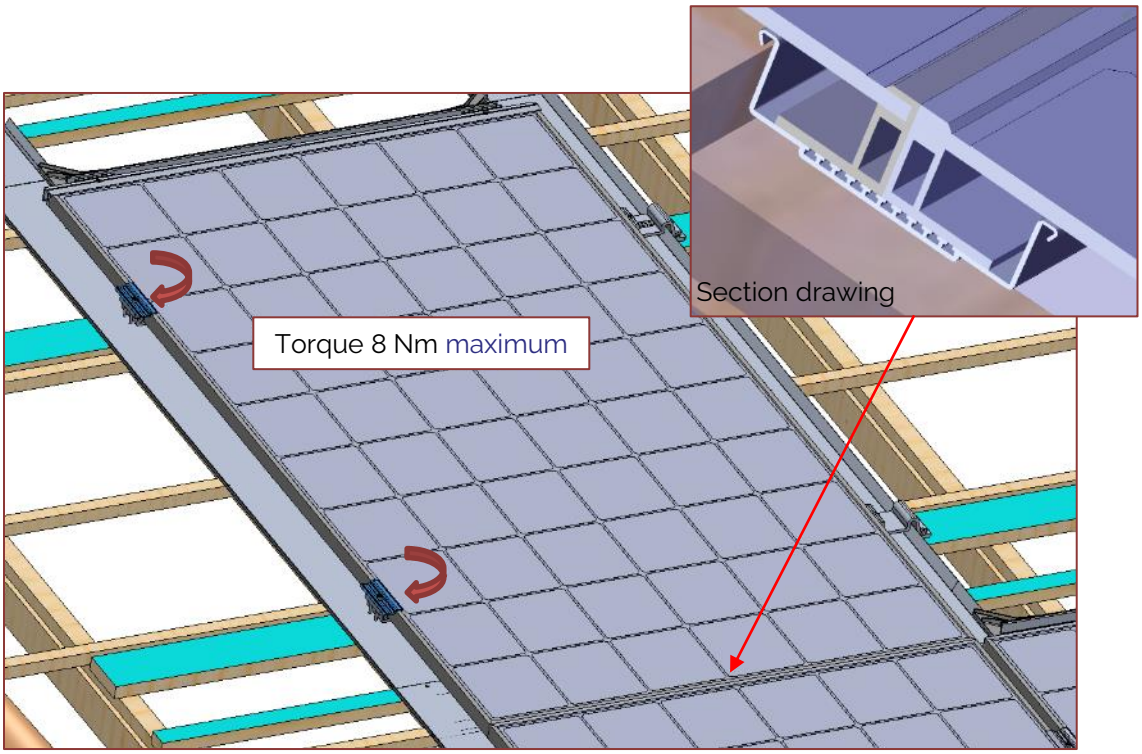

Assemble the next modules and then the middle [3] and end clamps [4] at the end of the line.

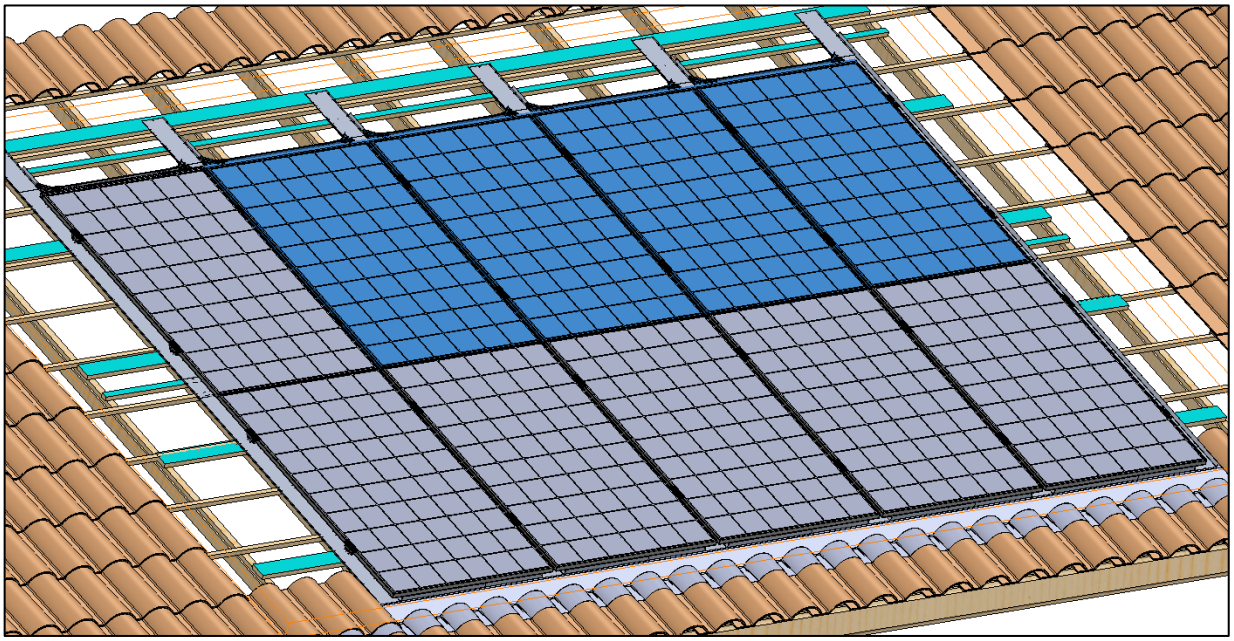

Screw the end [4] and middle clamps [3] with M6x25 or M6x30 screws [17] according to the thickness of the PV module, and tighten (8 Nm maximum)

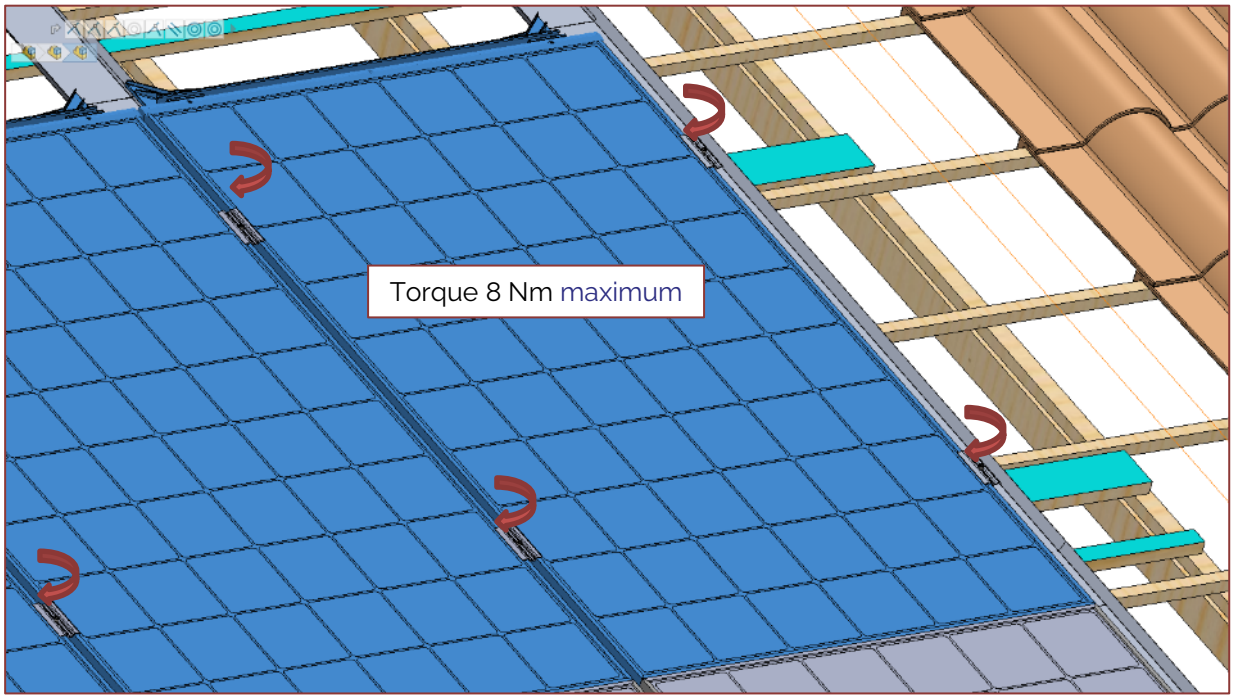

10°) Assembly of top flashings and deflectors.

Insert the top flashing [20] or [21] into the deflector fixing pieces [7].

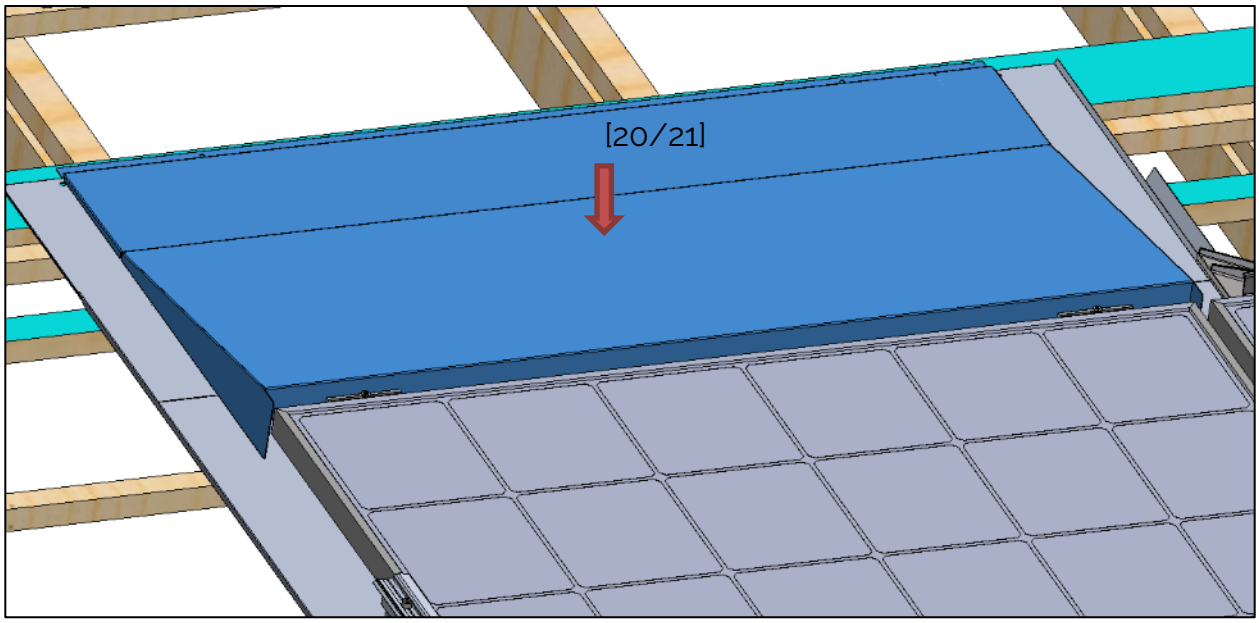

Wedge the top assembled top crossing member [5 + 6 + 7] against the PV module frame.

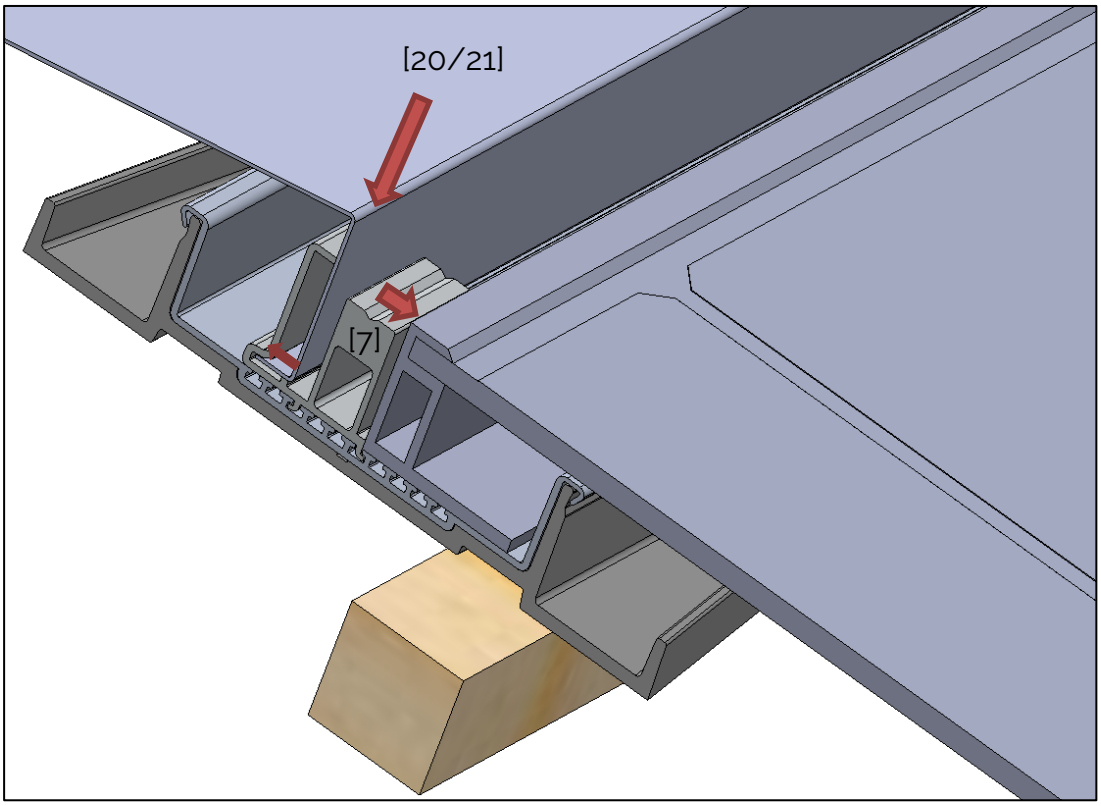

Insert the top deflectors [19] .

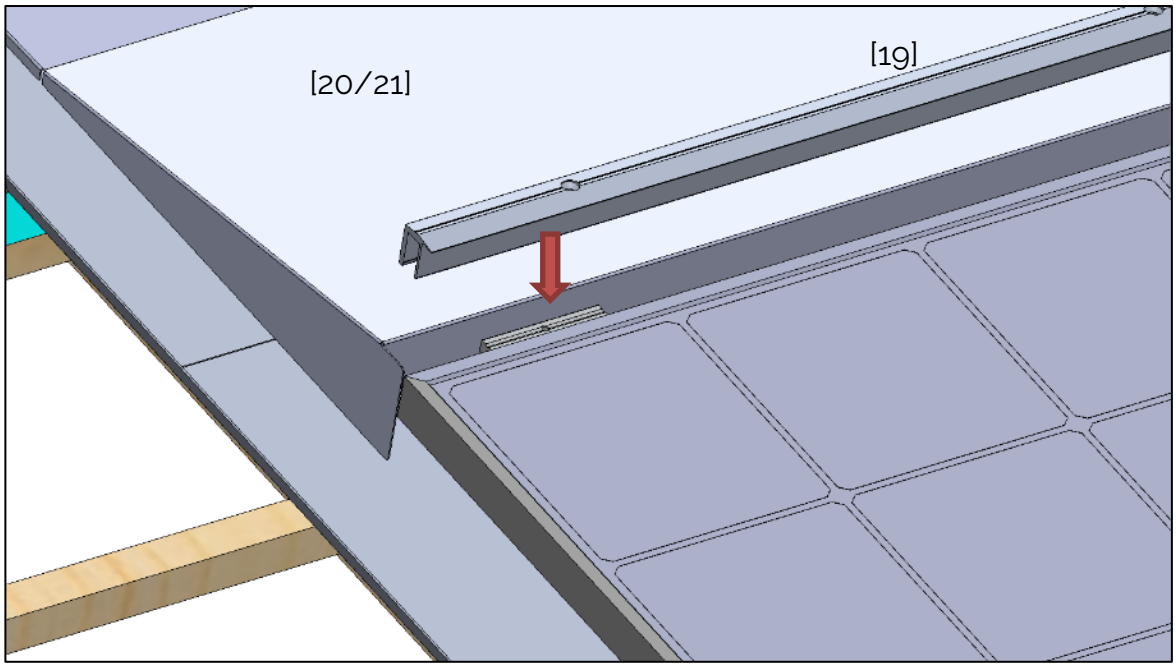

Insert the TF M5 Torx screws [16] into the deflector [19] and tighten them into the fixing deflector pieces [7].

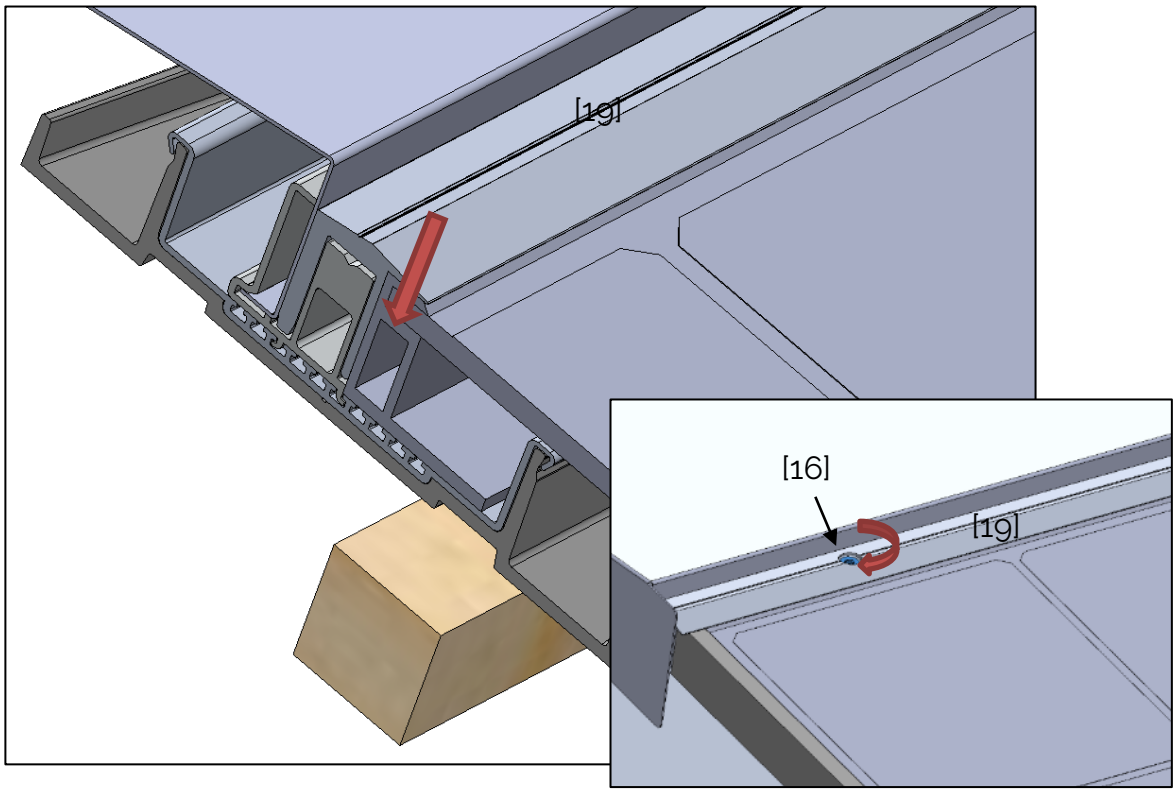

Screw the top flashing [20/21] with 2 Ø5 wood screws (not supplied).

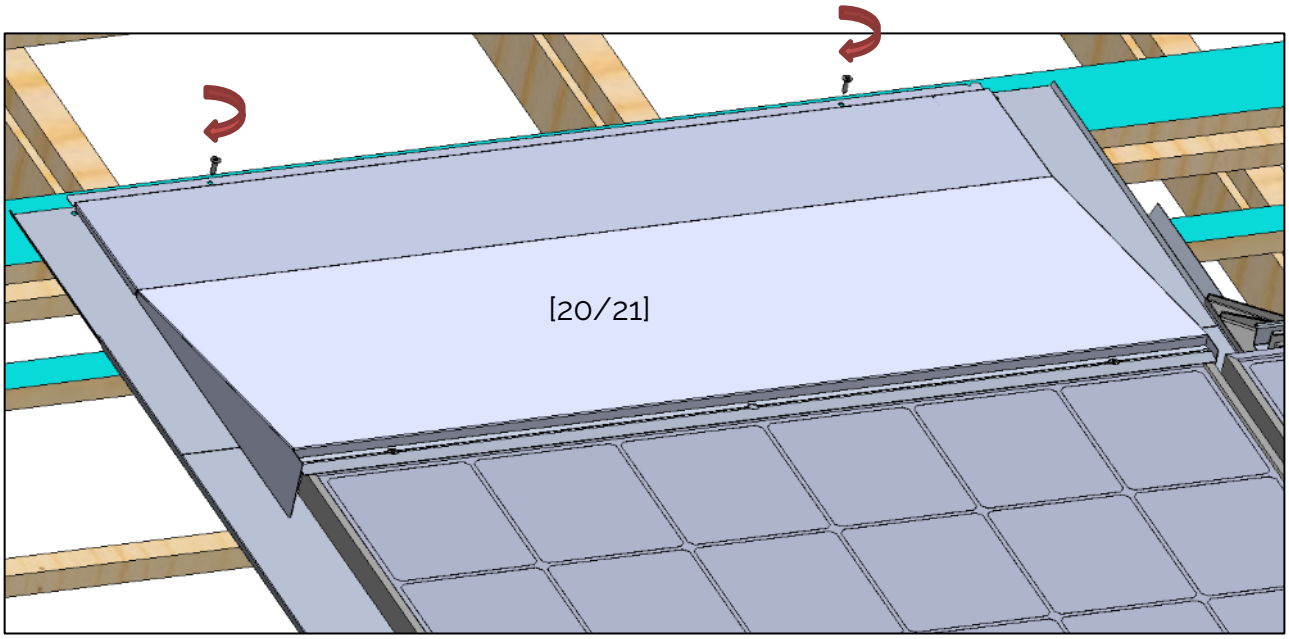

Assemble all the top flashings [20/21] and remaining top deflectors [19], insert the TF M5 Torx screws [16] and tighten.

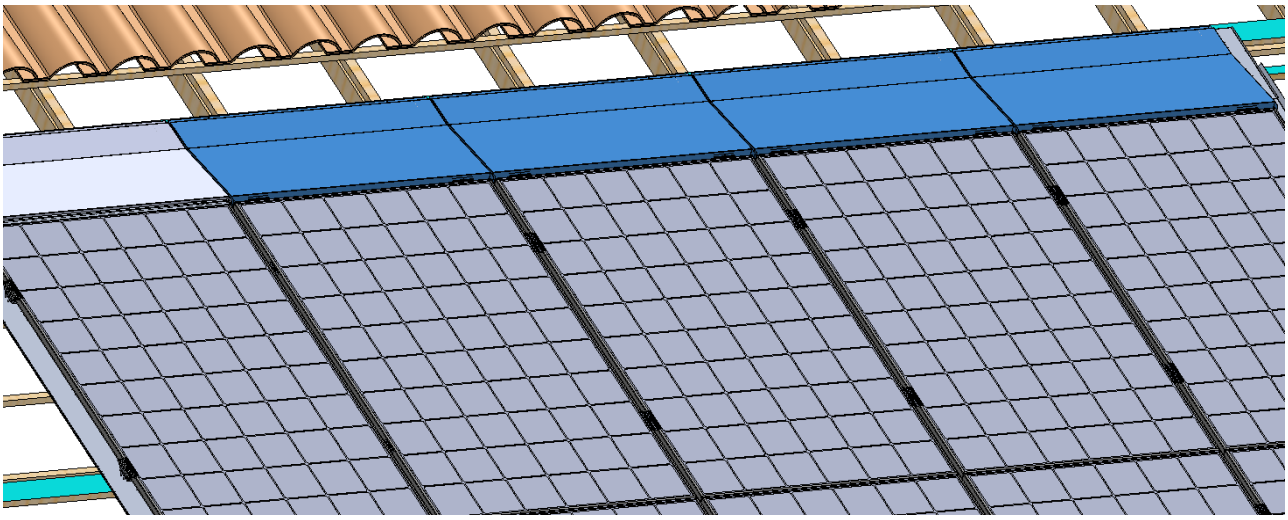

11°) Assembly of side flashings [13] et [14]

Screw the bottom left flashing [14] with Ø5 wood screws .

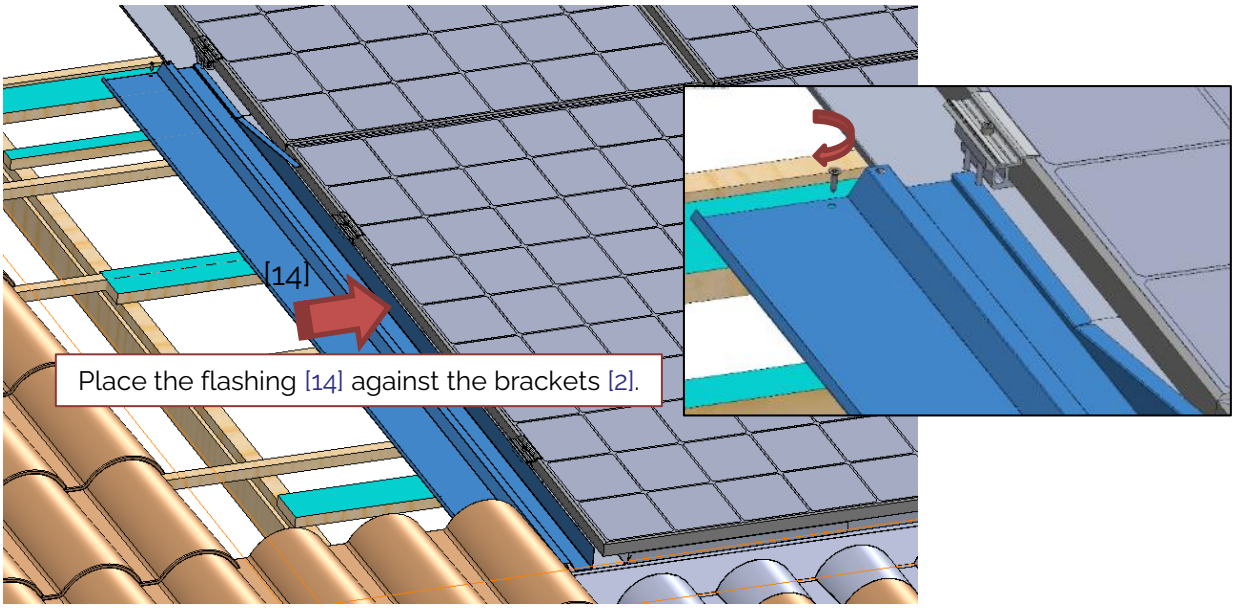

Screw the top left flashing which covers the bottom flashing with Ø5 wood screws .
Repeat the process for the two lines at the top.

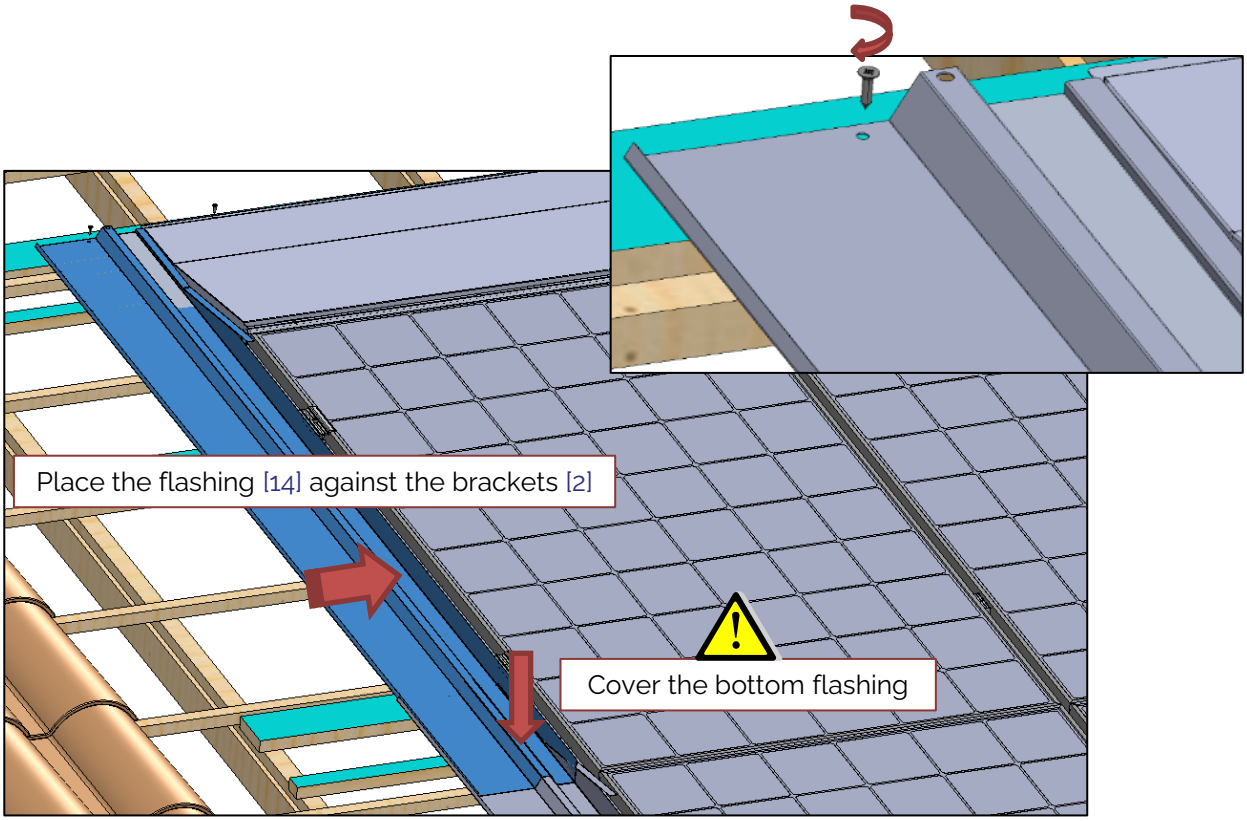

Assemble and screw the bottom right flashing [13] and then the flashing at the top with Ø5 wood screws .

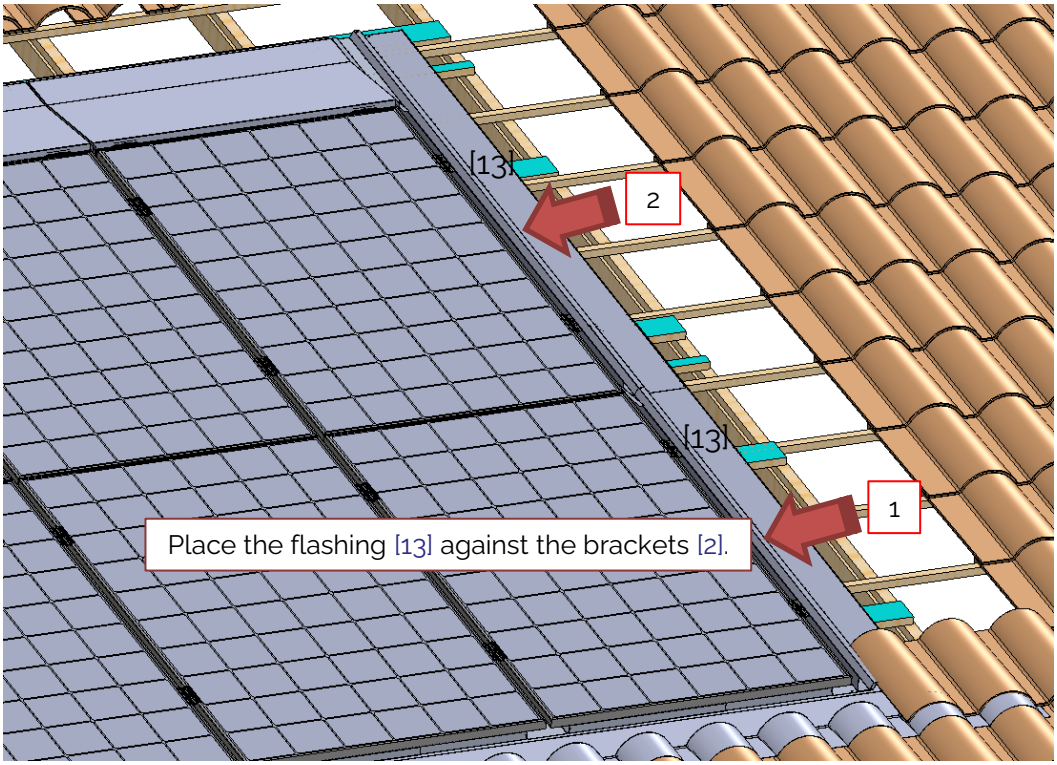

Stick the foam (select the foam dimensions according to the type of tiles).

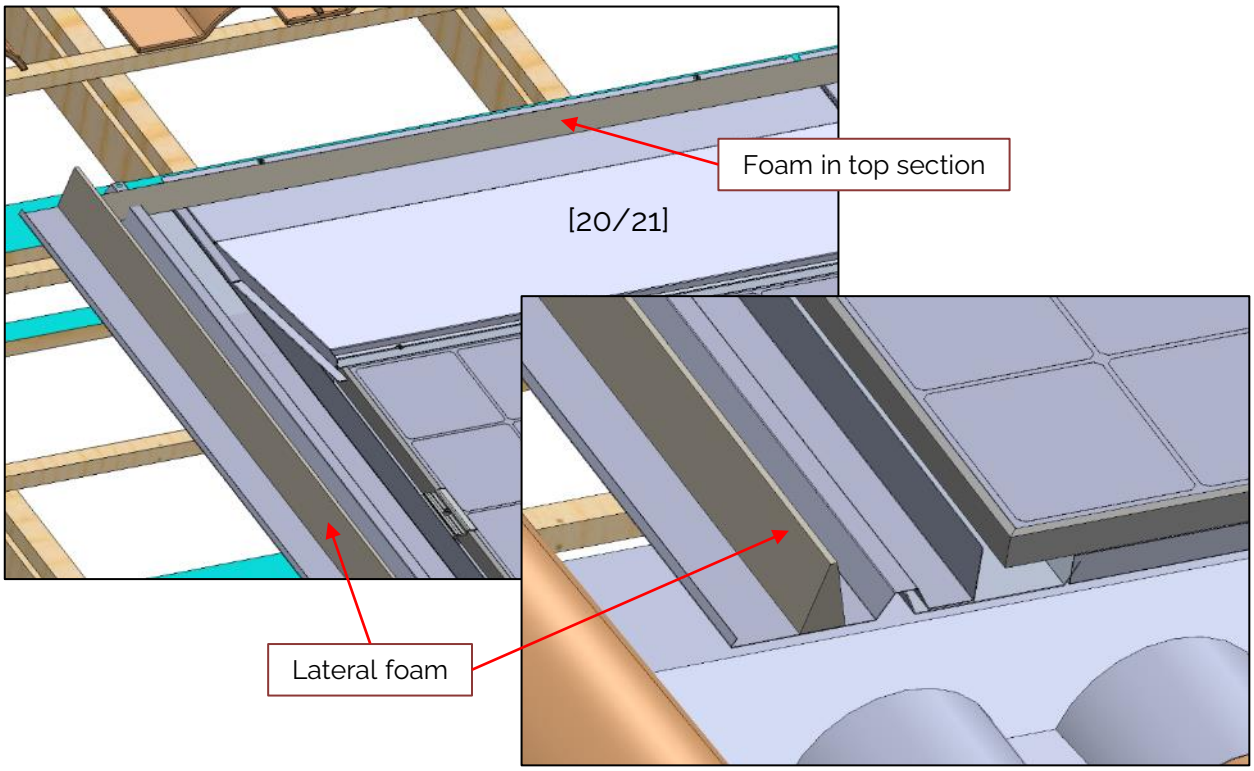

12°) Assembling the end locking bars [8] and [9]

Present the end locking bar [8]. Drill the two holes with diameter 5 mm.

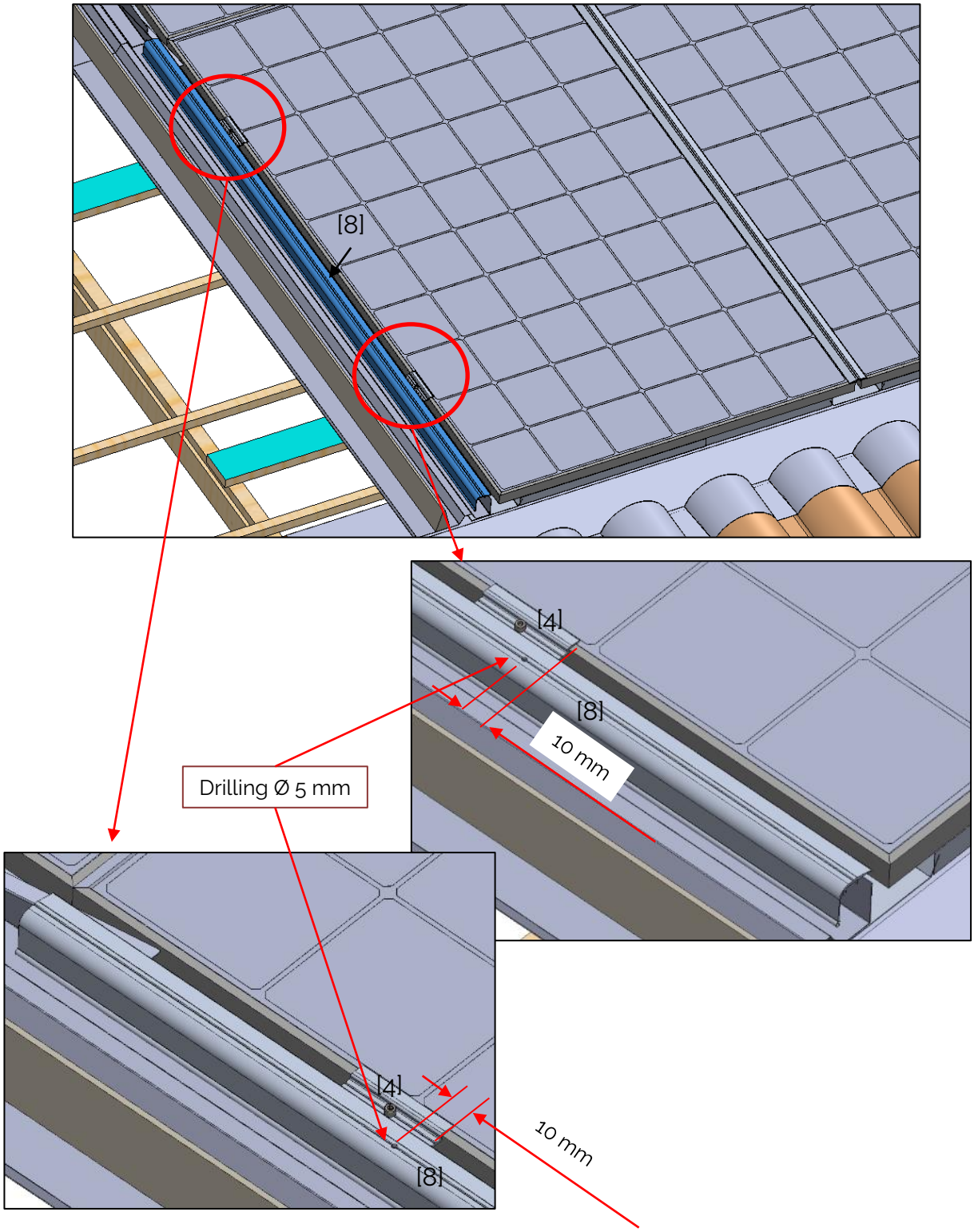

Screw the end locking bar [8] with 2 4.8 x 25 self-tapping screws [15].

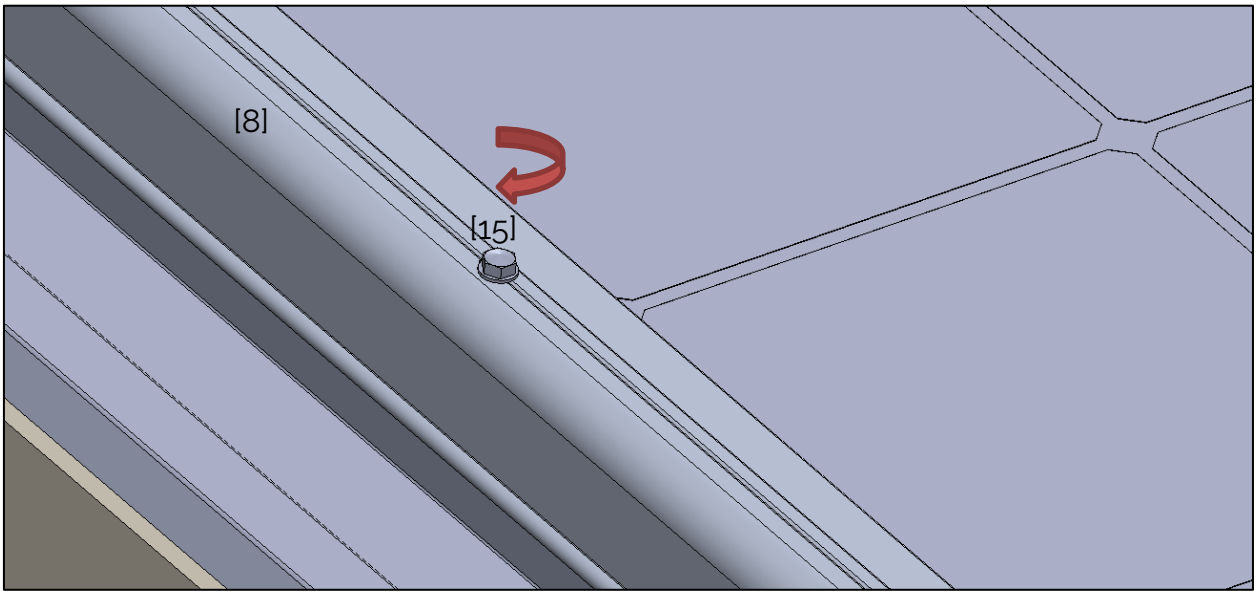

Assemble the top end locking bar [8] in the same way and cut it at the top as indicated. Screw with 2 4.8 x 25 self-tapping screws [15].

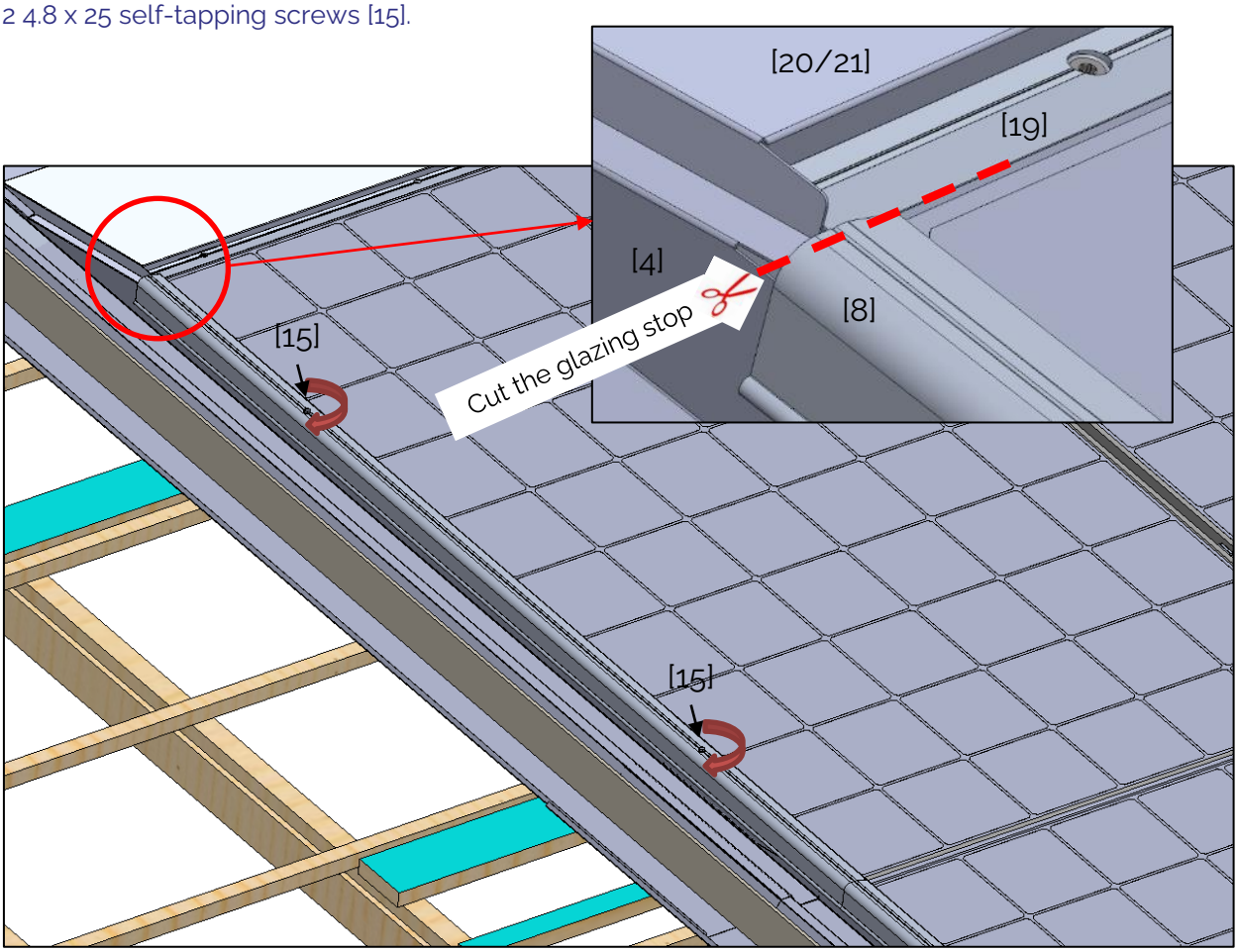

Present the middle locking bar [9]. Drill the two holes with diameter 5 mm.

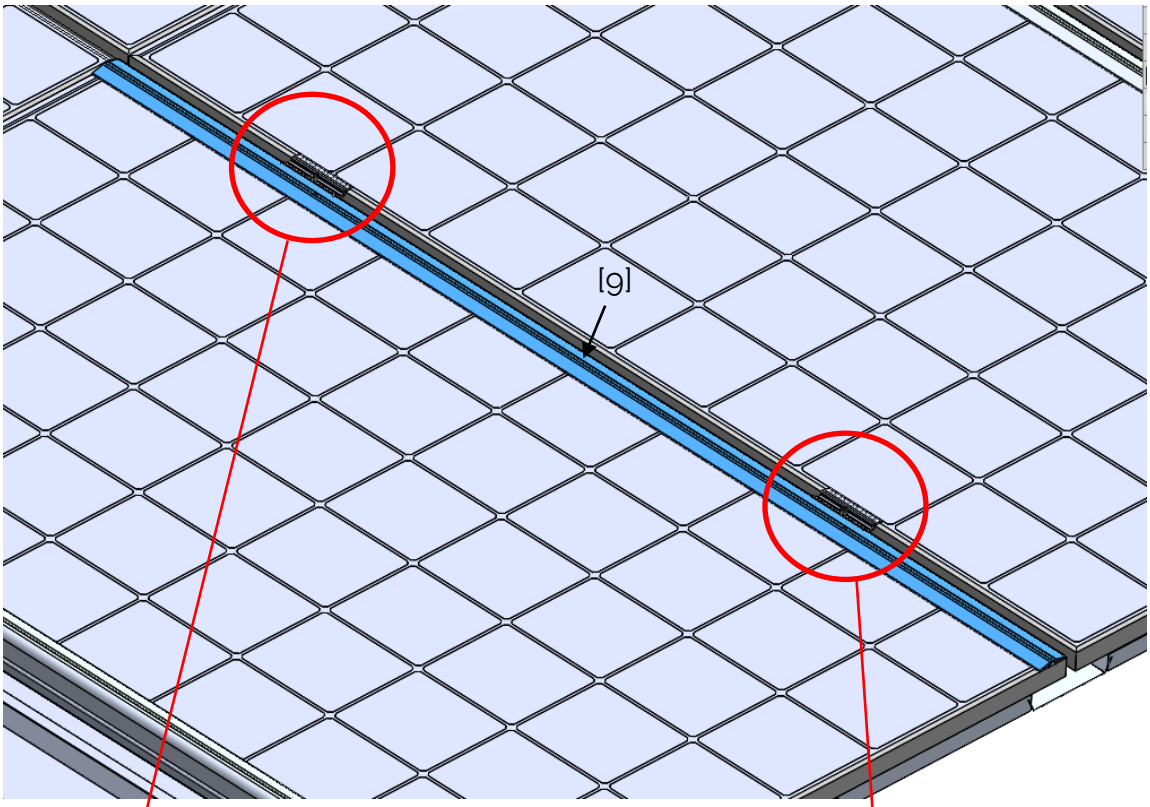

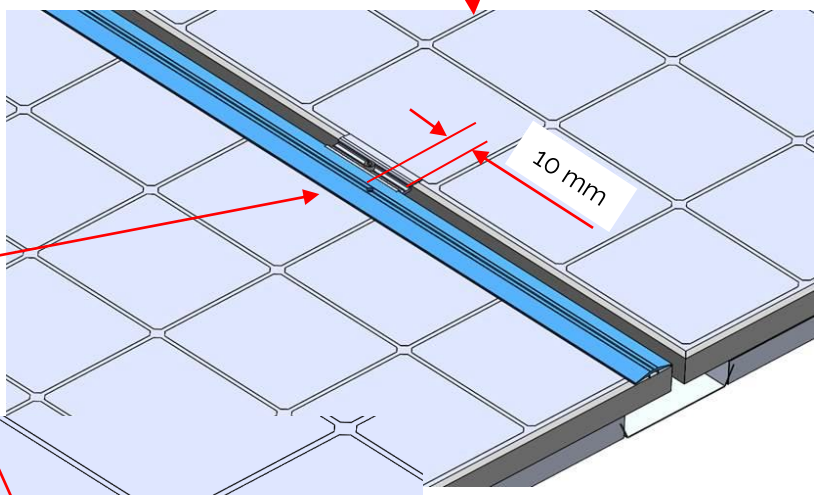

Drilling Ø 5 mm

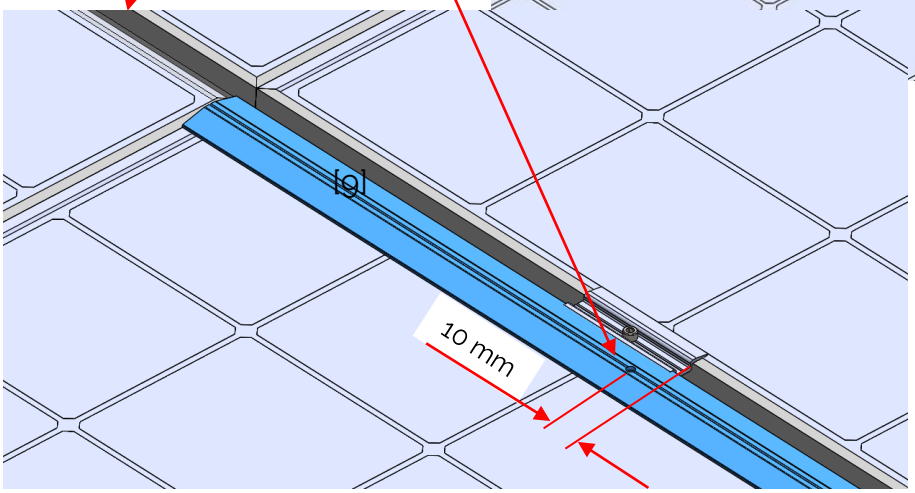

Screw the middle locking bar [9] with 2 4.8 x 25 self-tapping screws [15]..

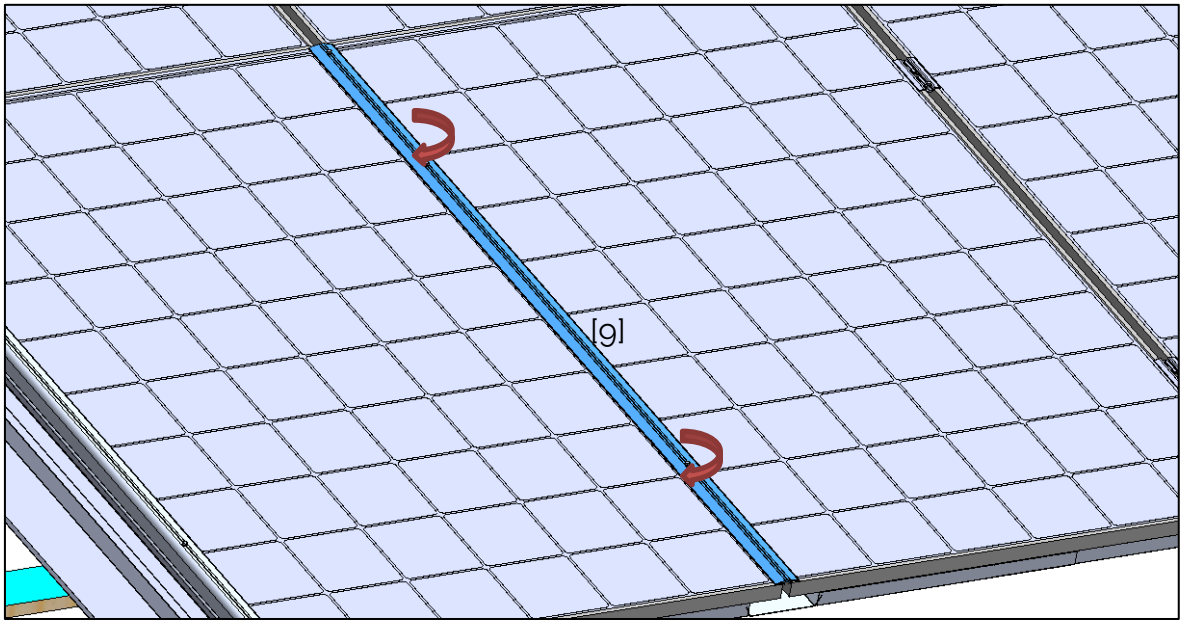

From one line to the other, reserve a clearance of 5 mm for the expansion between two middle locking bars [9].

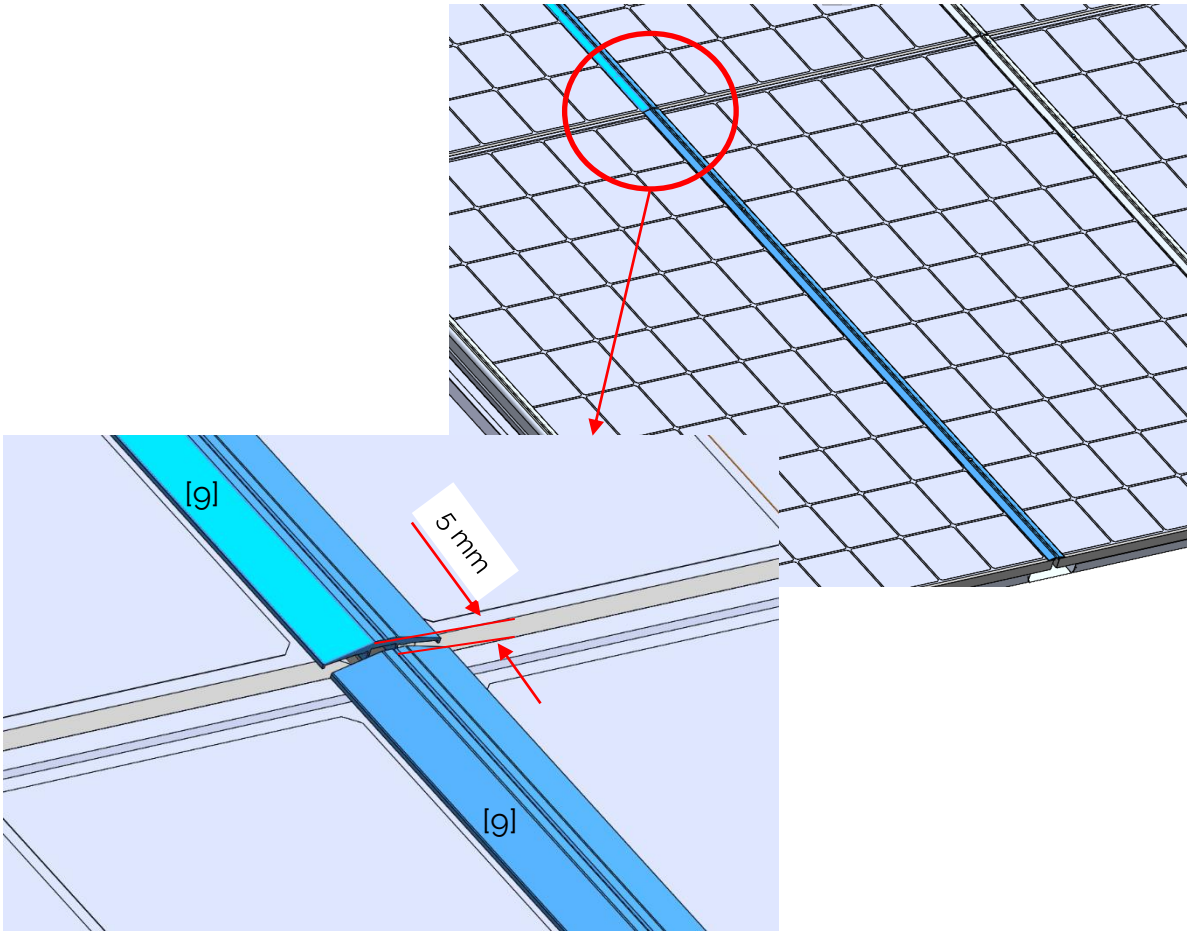

Assemble the top middle locking bar [9] in the same way and cut it at the top as indicated.
Screw with 2 3 4.8 x 25 self-tapping screws [15].

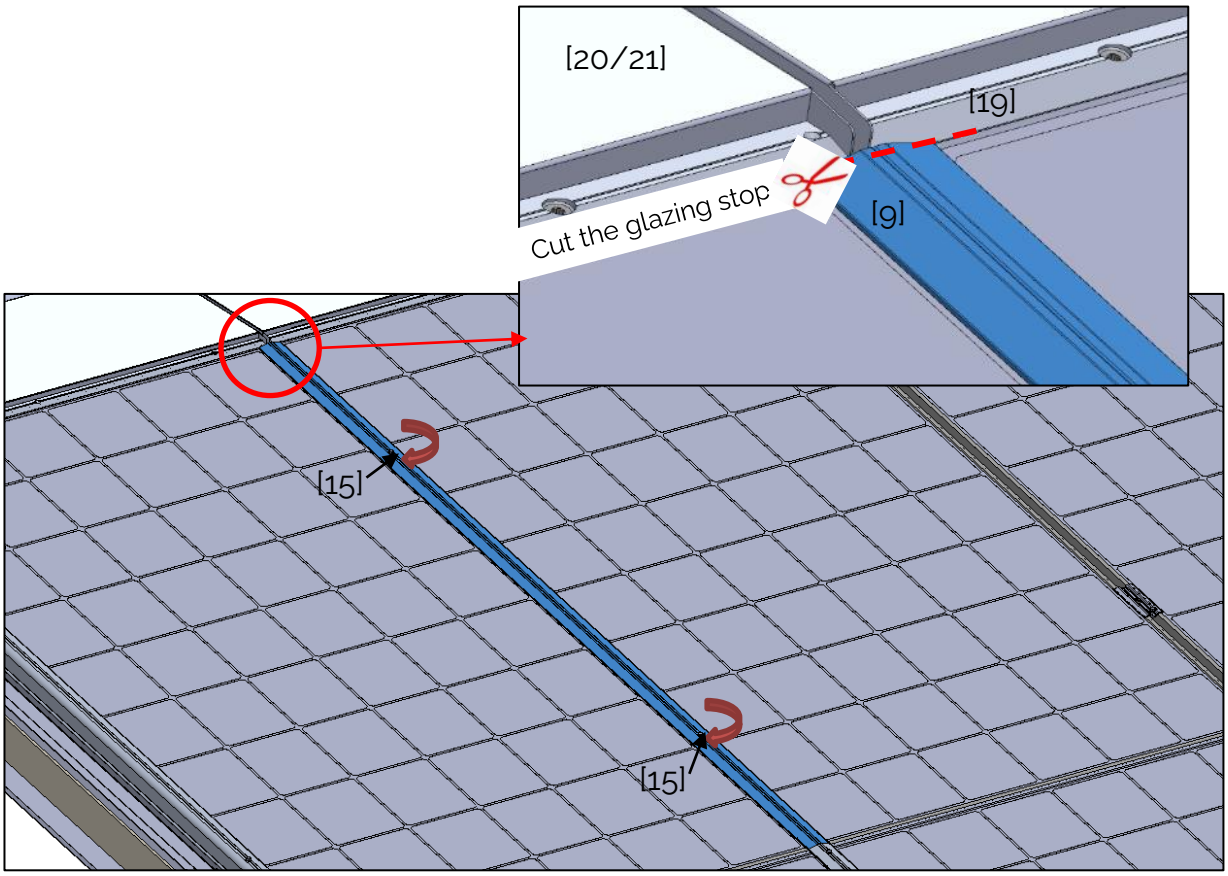

Assemble the remaining end and middle locking bars [8] and [9].

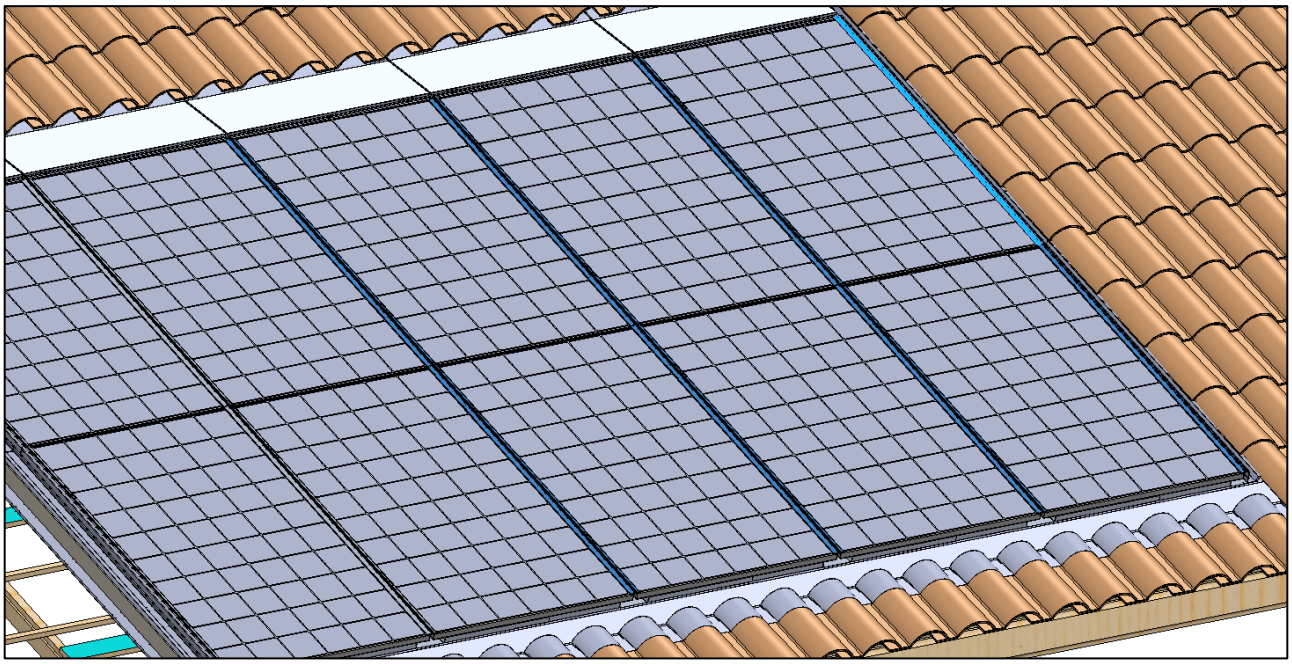

13°) Put tiles back in place

Put the tiles back in place around the PV field.
Cut certain tiles if necessary.

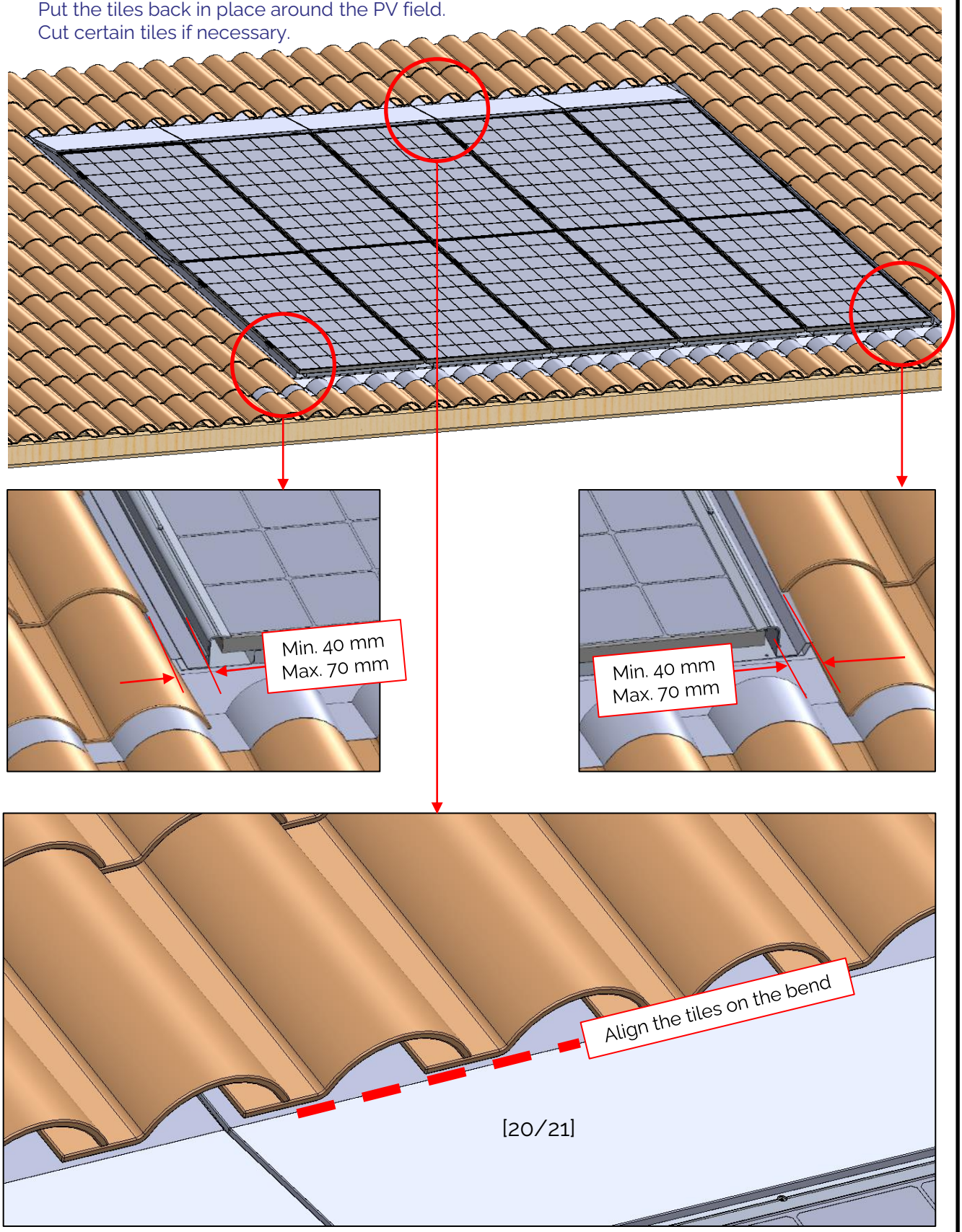

Appendix 1

Side edge assembly

A°) Definition of the edging plate

The metal plates on the left and right sides are of the same shape.
The "X" dimension may vary between the left and right depending on the gap between the frame and the edge board (field position). "X" must not be less than 20 mm.

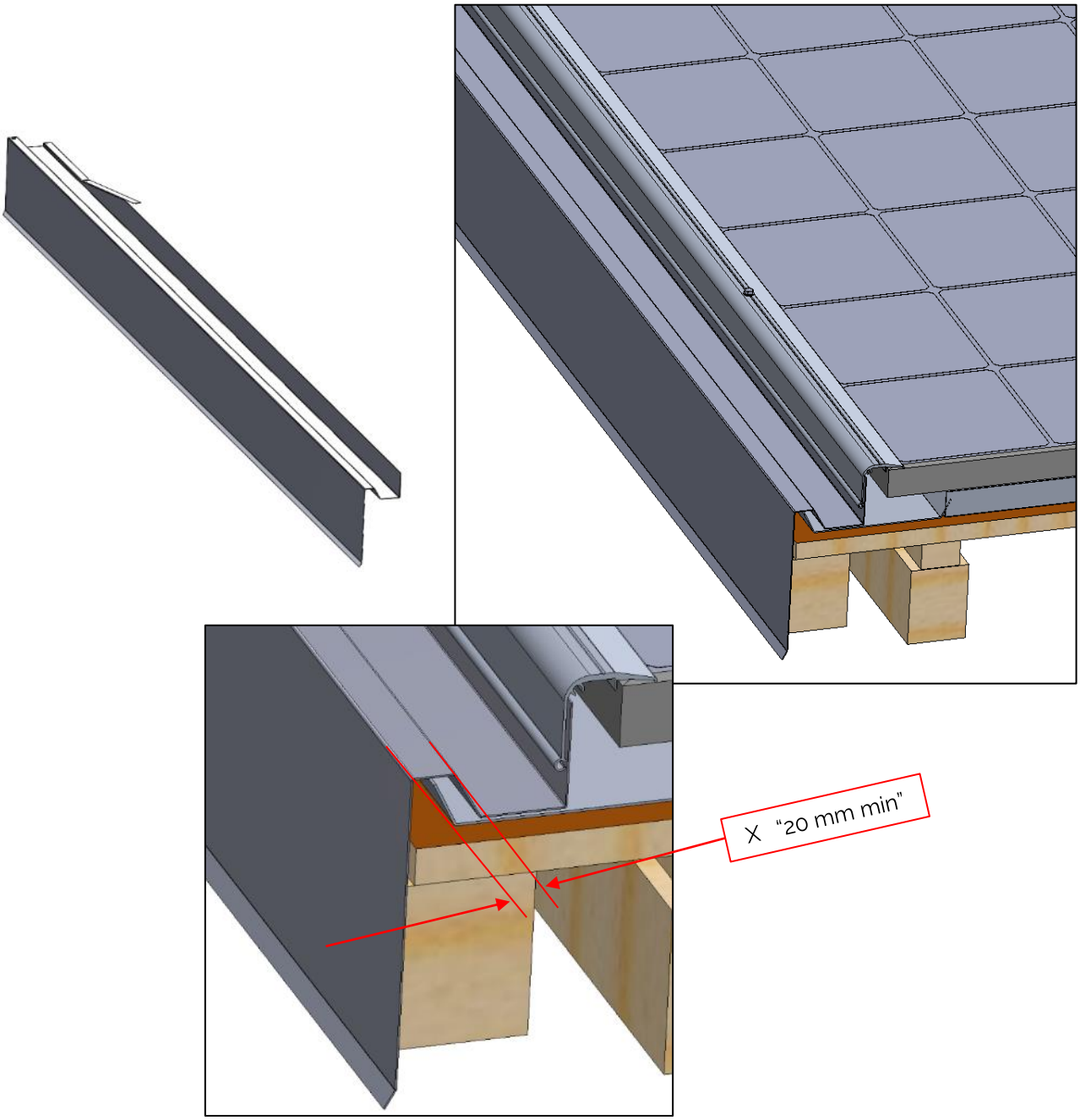

Appendix 2

Module compatibility

Before installing the EASY ROOF system, make sure that the PV module chosen for the installation is on the compatibility list drawn up by IFRTS (www.edilians.co.uk).

If the module comprises junction boxes in the upper section:

Check the position of the junction box in relation to the edge of the PV module. The two conditions described above must be fulfilled in order to install this PV module with the junction box.

a) X1: Distance between the module backing and the rear side of the module > 21 mm

b) X2: Distance between the frame return and the junction box > 8 mm

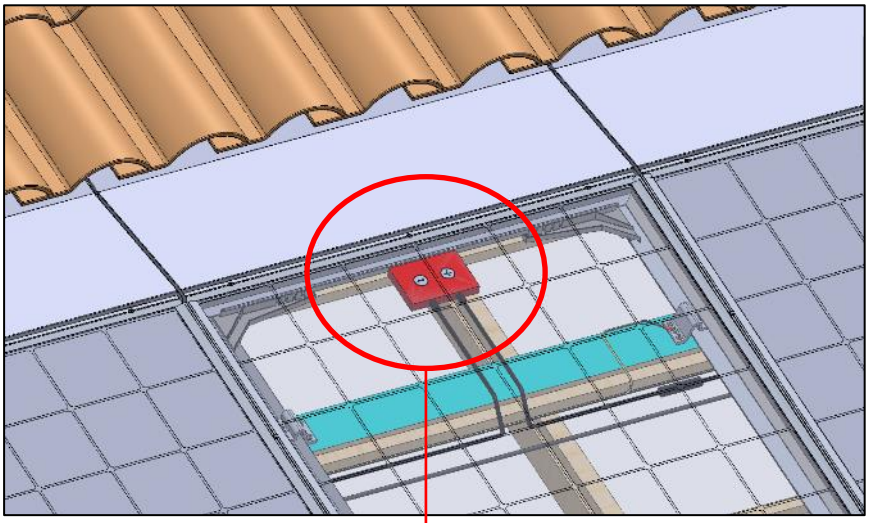

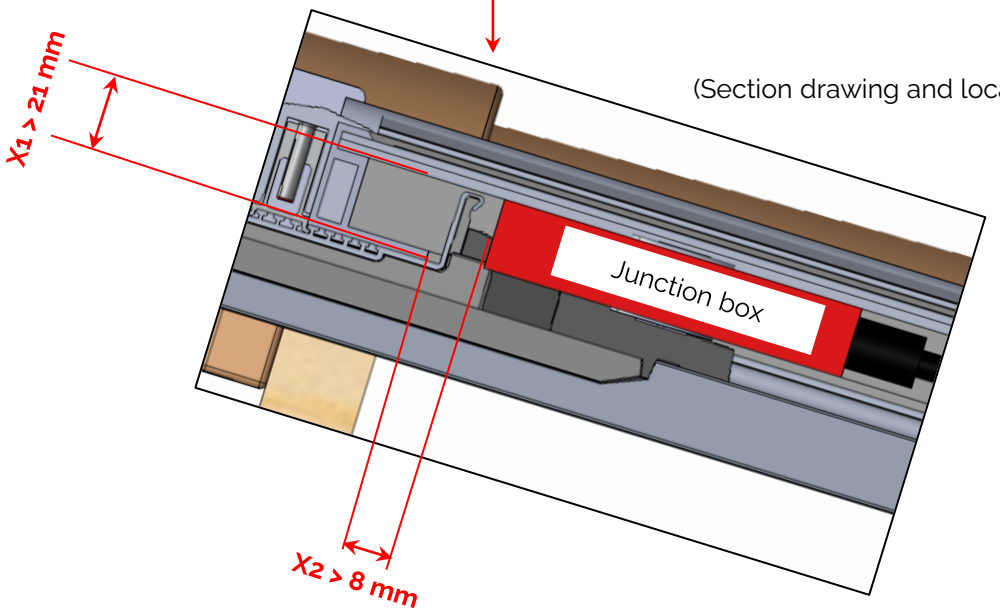

(Section drawing and local section)

Compatibility with AC modules (equipped with micro-inverters)

In the case of a module equipped with an integrated micro-inverter, in addition to the elements described above, the following must be checked:

- The distance between the micro-inverter and the edge of the PV module in order to check that the watertightness elements fit properly in.
- The thickness of the micro-inverter protusion in operating position in order to check that it is fits into the roof and that it is correctly ventilated.

The three conditions described below must be met in order to be able to install the PV module:

a) d: Protrusion of the micro-inverter in operating position compared to the frame of the module < 29 mm

b) The thickness of the air gap under the micro-inverter Y1, or, in the absence of a breather membrane positioned above the wood supports and in the absence of a wood support directly positioned under the micro-inverter (check the position of the micro-inverter and the layout of the battens on pages 28 and 29), Y1' , must be compatible with the recommendations of the the micro-inverter manufacturer. Edilians cannot be held responsible for any deficient ventilation of the micro-inverter.

c) Y2: Distance between frame return and micro-inverter > 8 mm

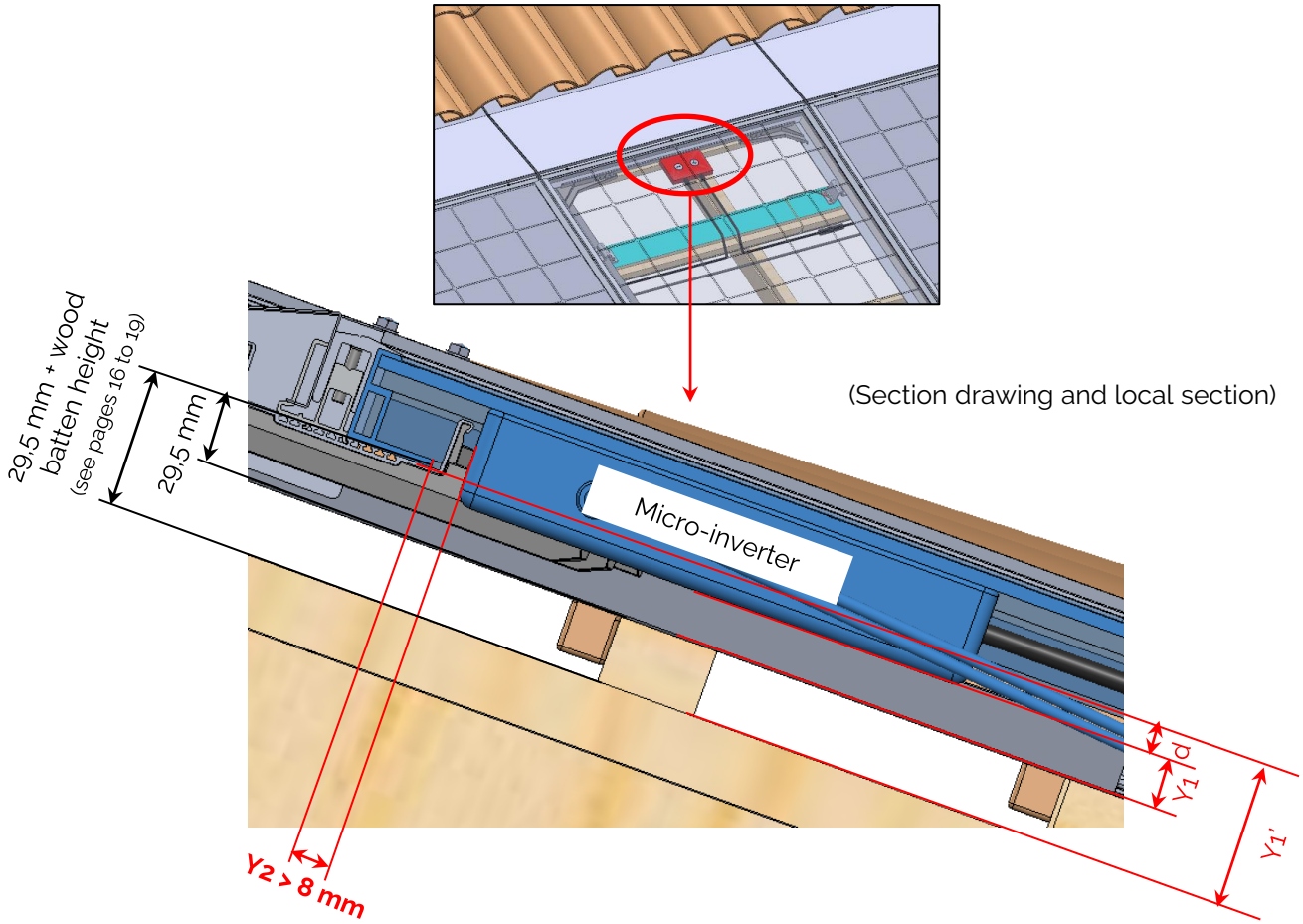

Appendix 3

Connecting the system electric wires and grounding

1/ EASY GROUNDING EDILIANS and self-tapping screw in the fixing bracket
Cabling without creating a loop

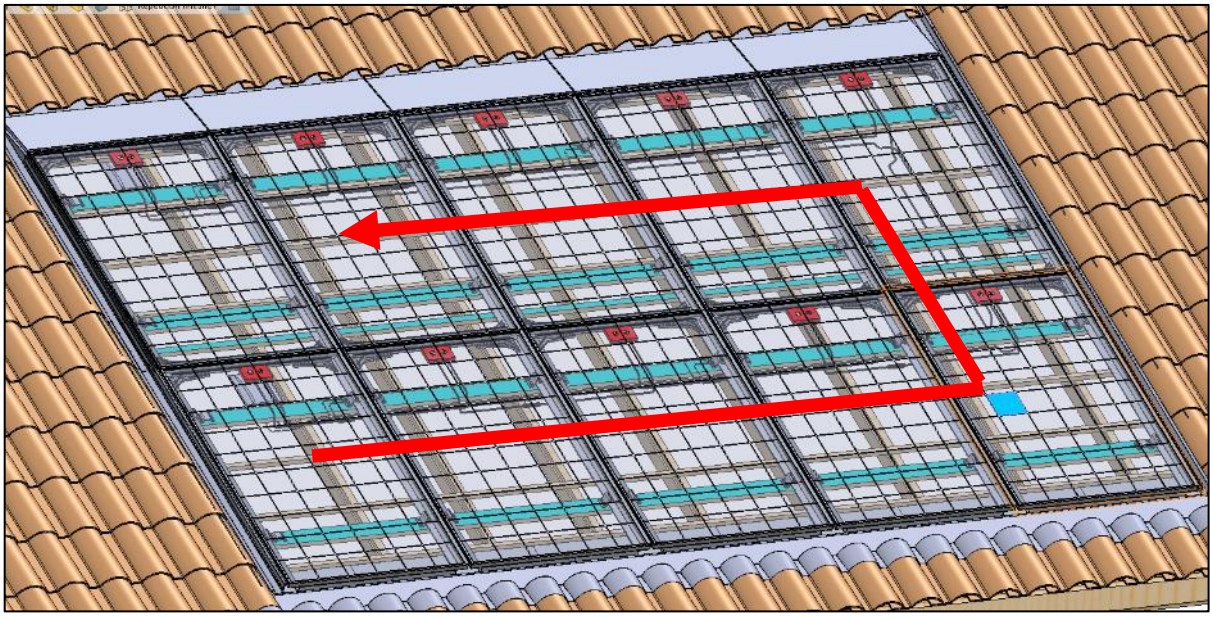

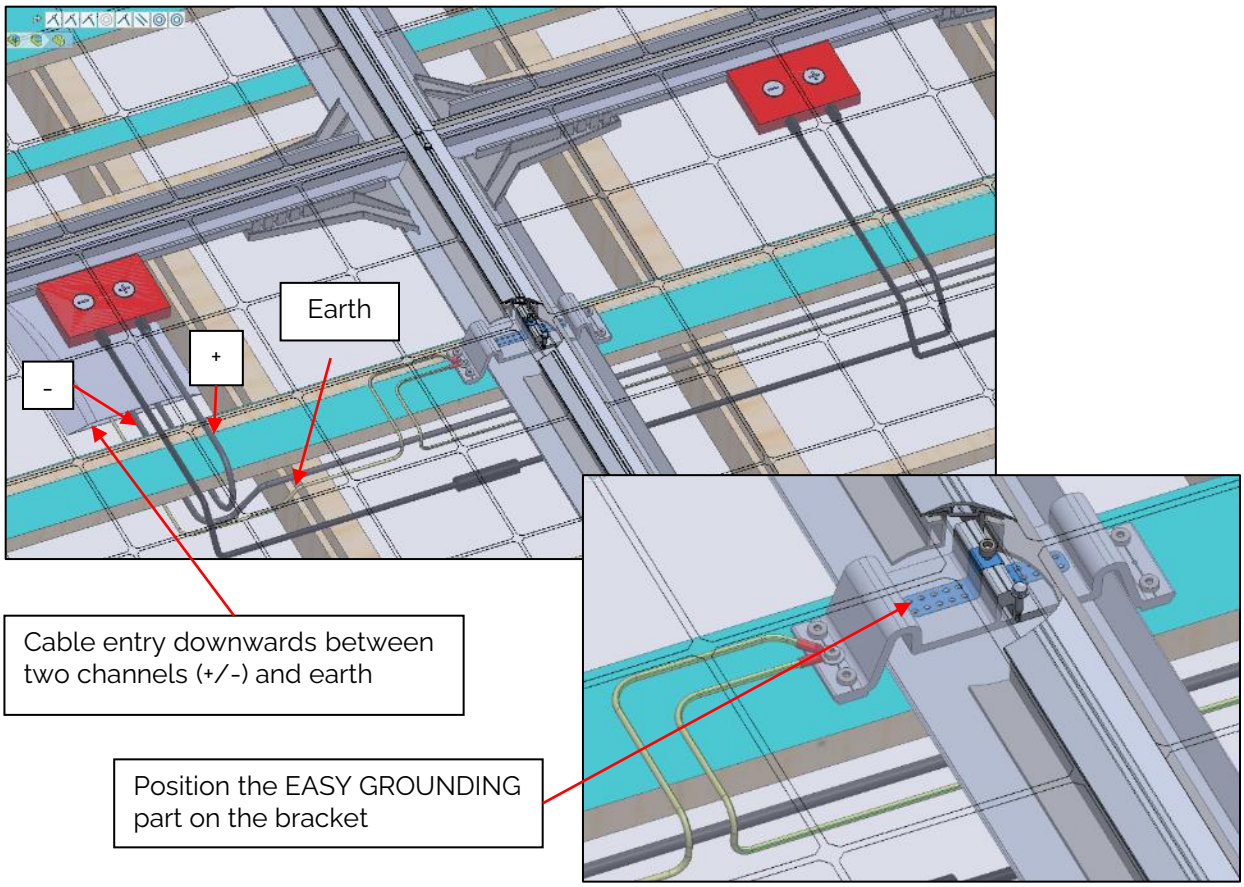

- Connect the earth to every other bracket.
- Connect the + and - entry of the inverter to the first and last modules without creating a loop.

- Connect the modules together (+ cable to - cable)
- Pass the - and the earth along these cables to prevent the formation of a loop.

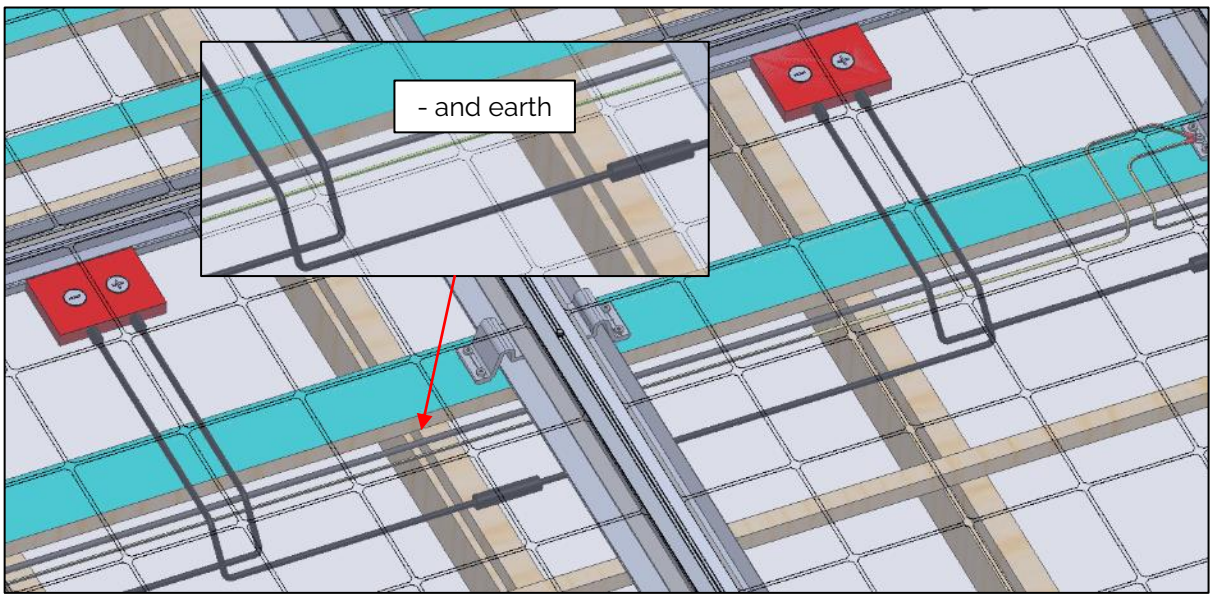

- Raise to the upper line

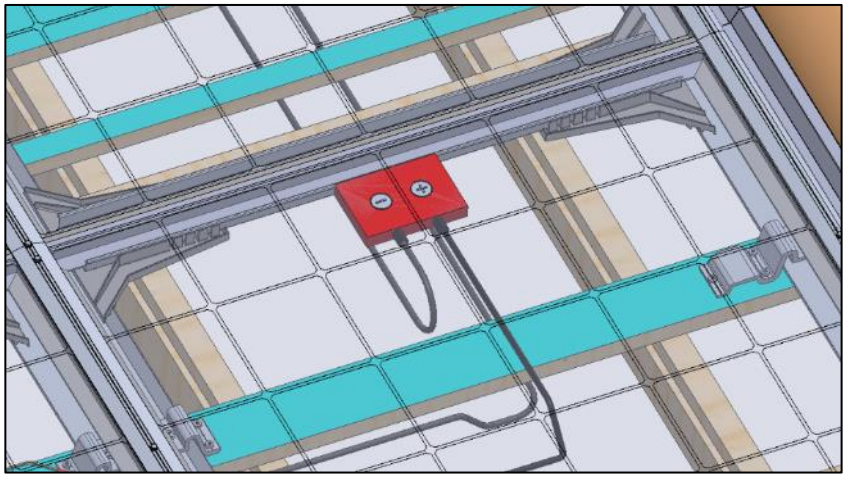

- Connect the final module

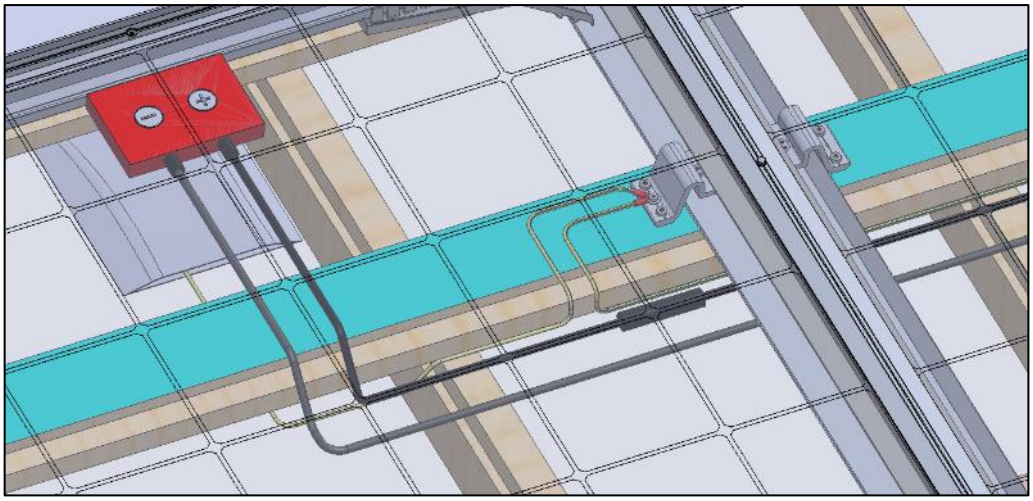

2/ Screw ground wire into the module frame and self-tapping screw into the bracket
Cabling without creating a loop

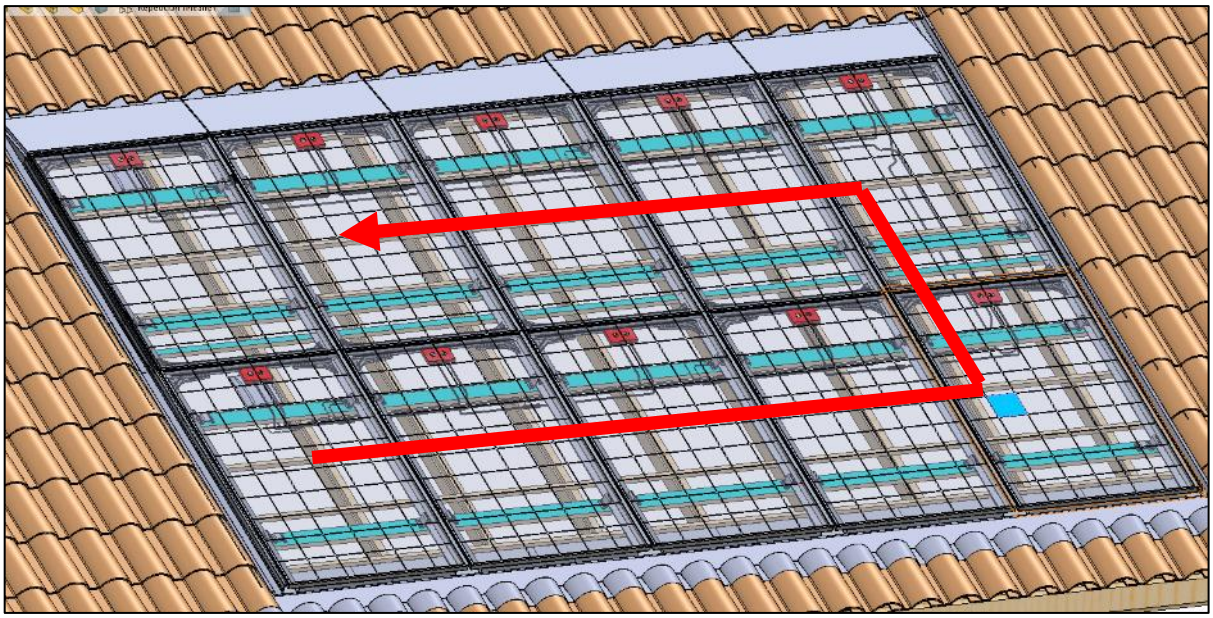

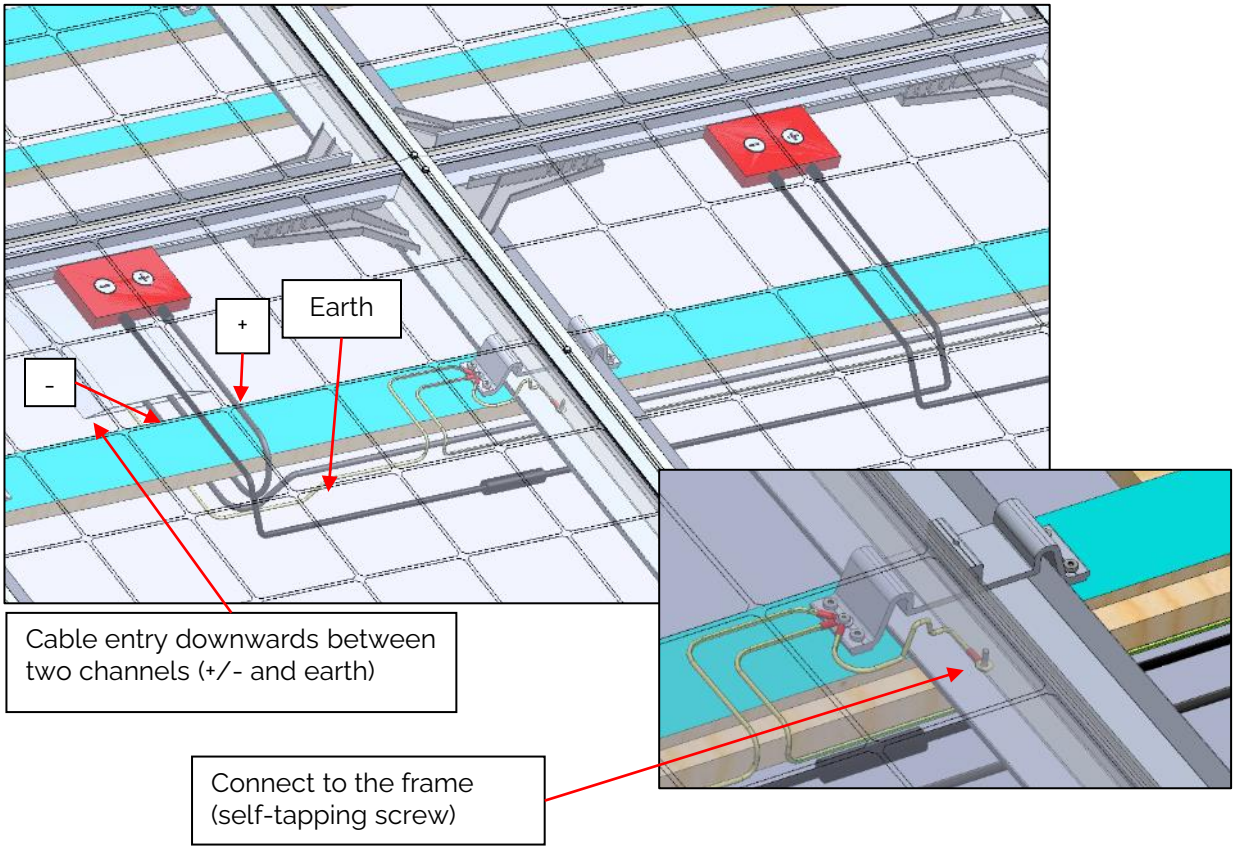

- Connect the earth to all the brackets and module frames.
- Connect the + and - entry of the inverter to the first and last modules without creating a loop.

- Connect the modules together (+ cable to - cable)
- Pass the - and the earth along these cables to prevent the formation of a loop.

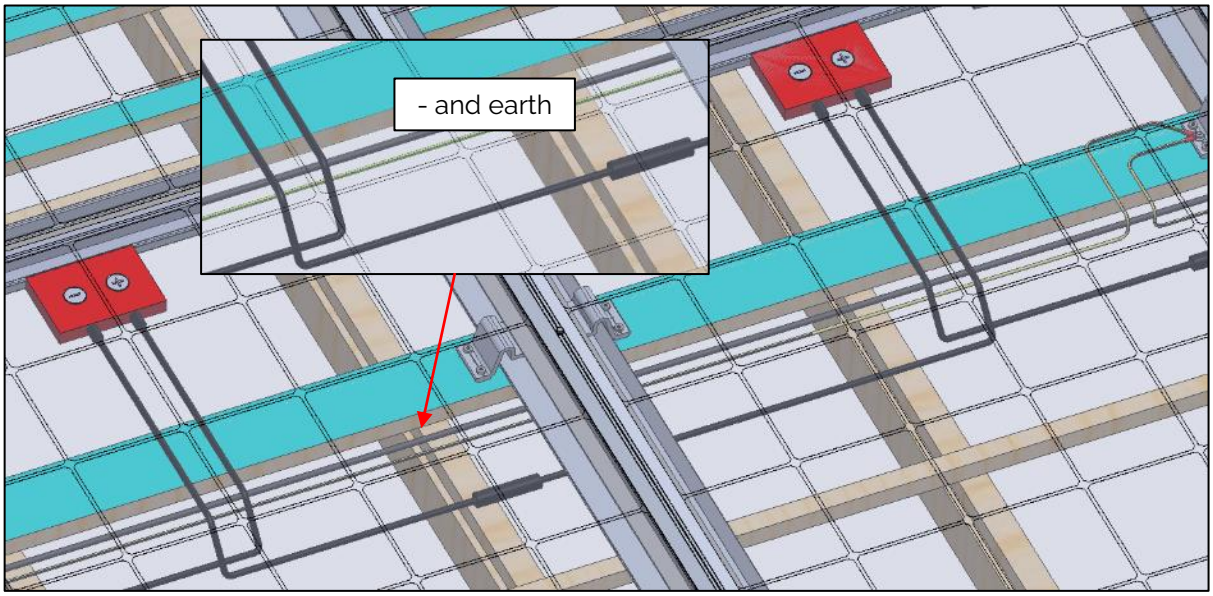

- Raise to the upper line

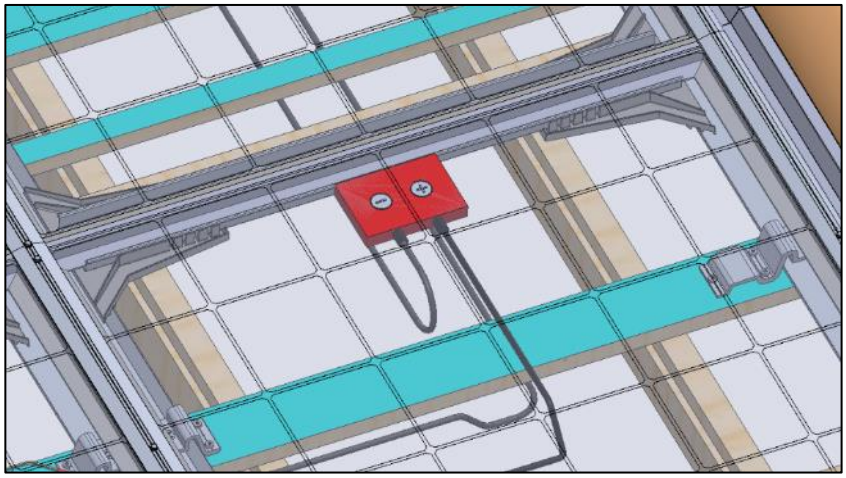

- Connect the final module

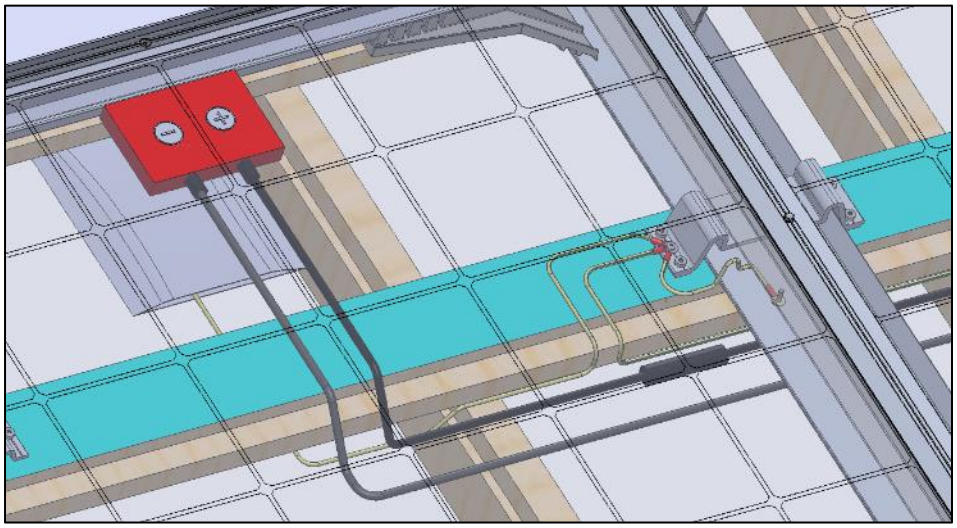

Appendix 4
Assembly with slates

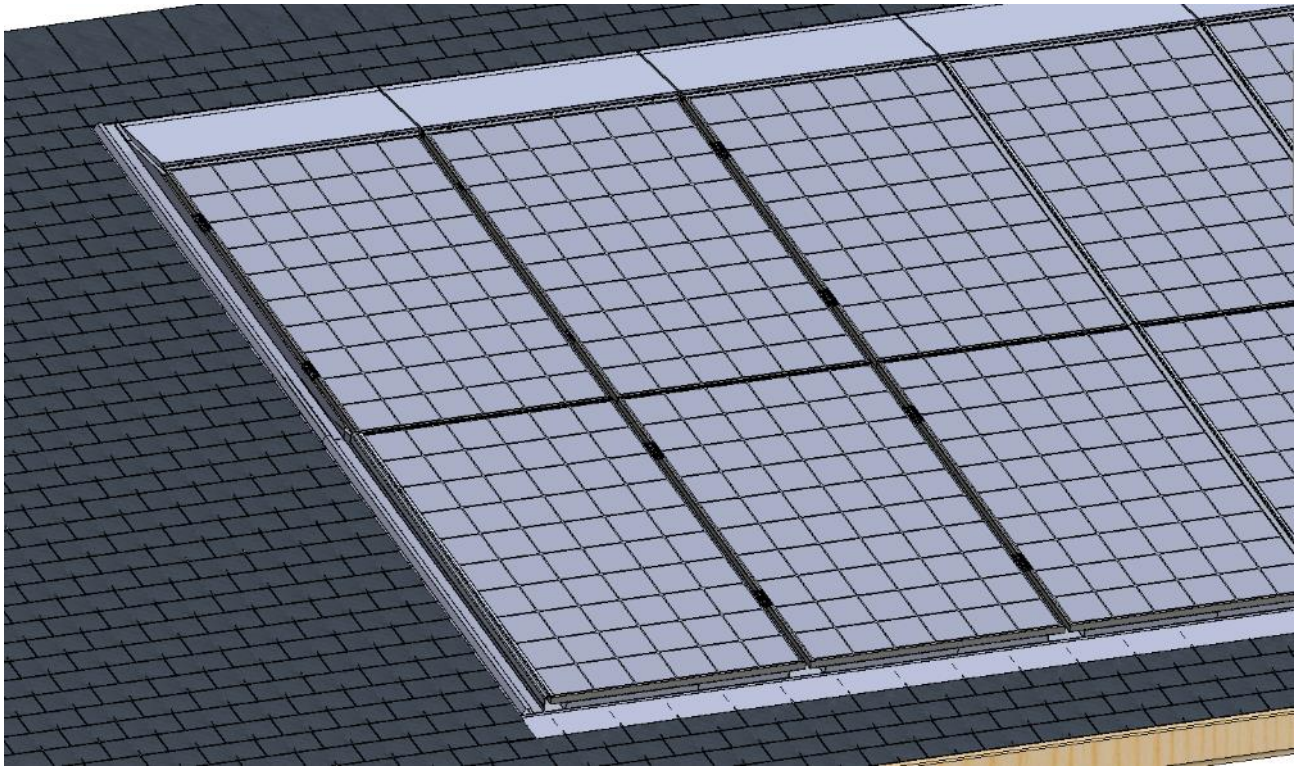

Assembly with zinc, copper or lead flashing

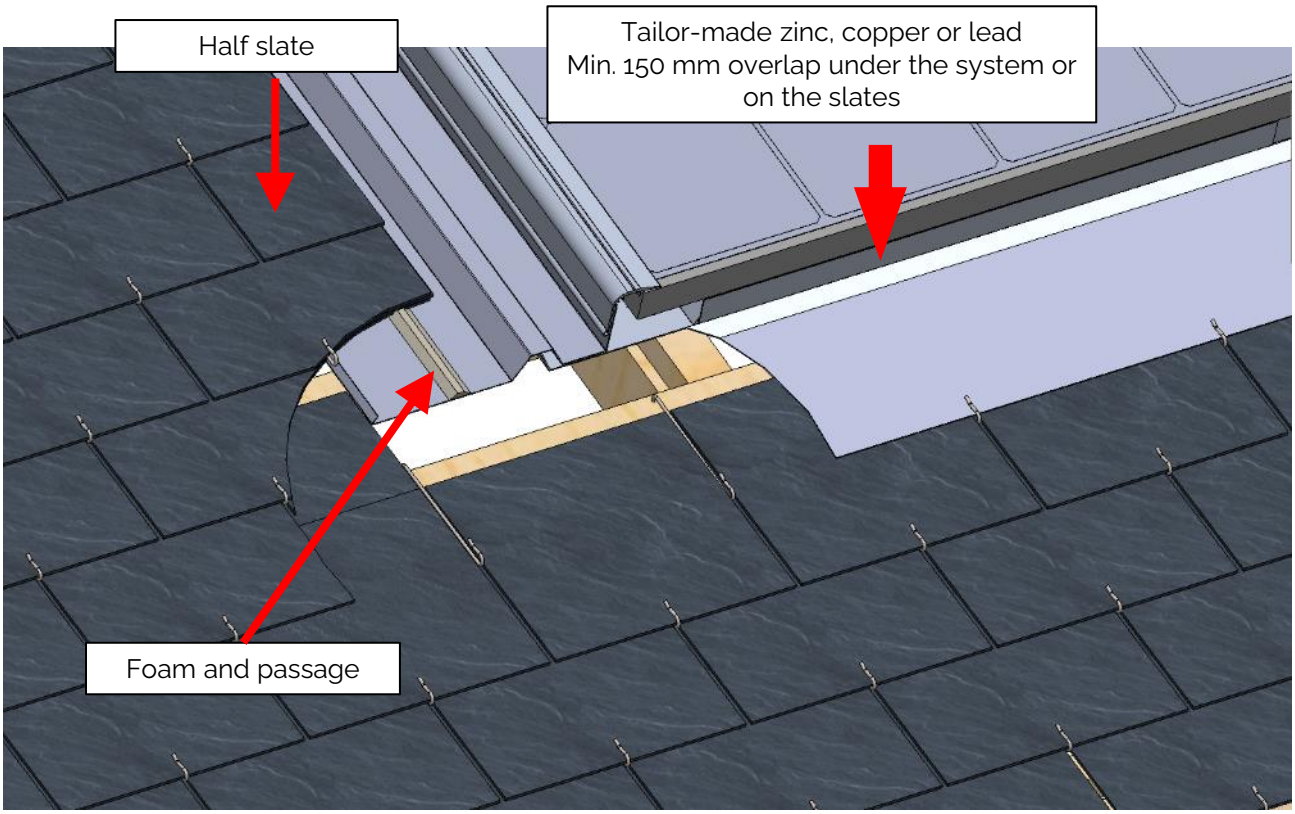

Assembly in passages

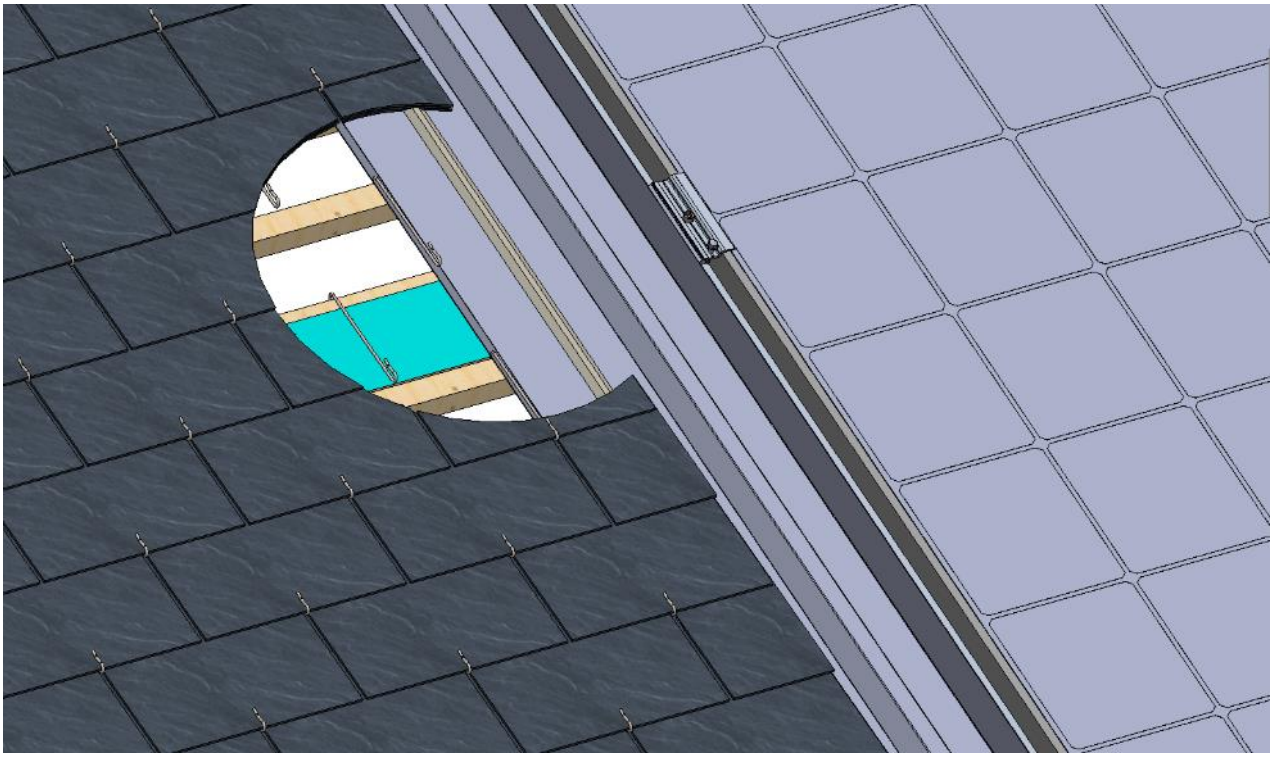

Assembly on top flashing

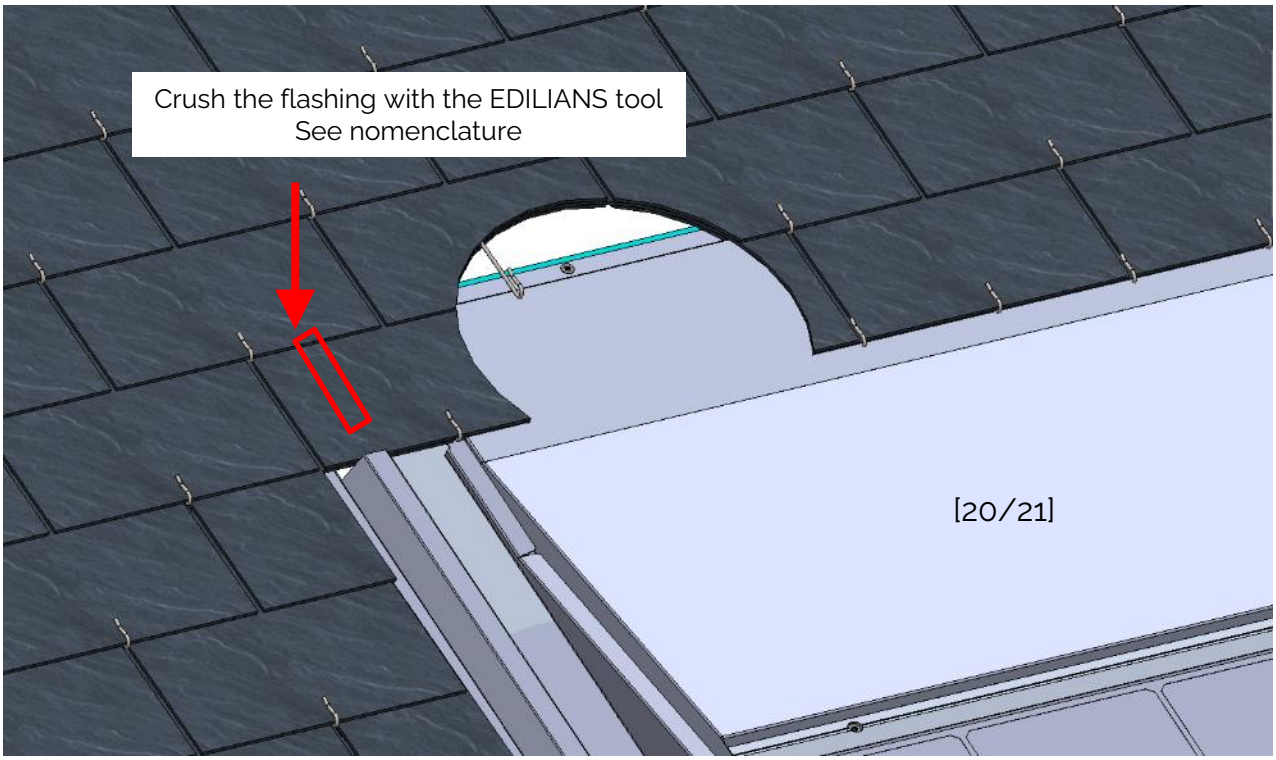

Shape the flashings with the EDILIANS tool [26]
For tiles with flat gauges and slates

Right flashing

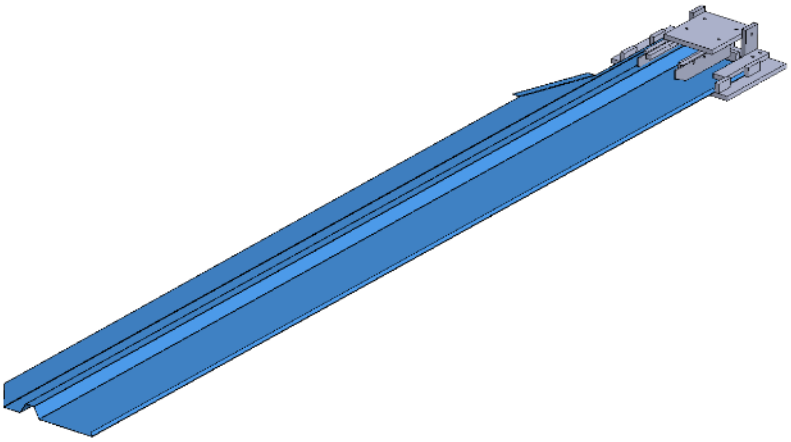

Left flashing

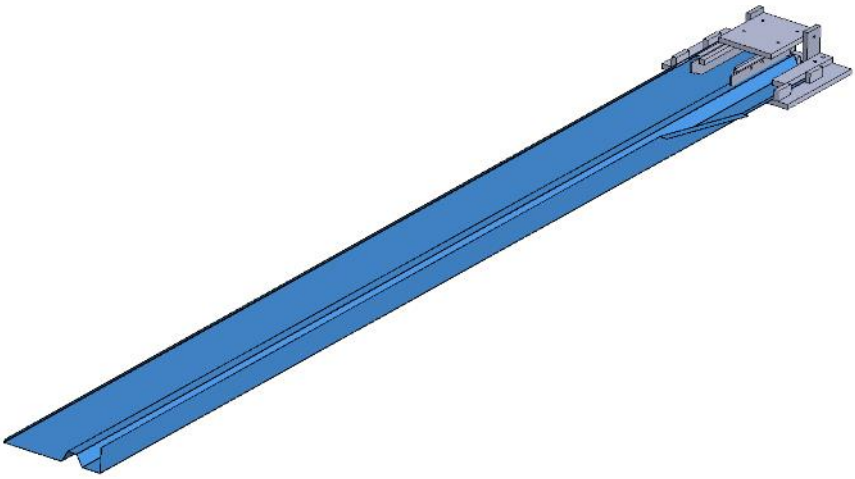

Appendix 5

C. Zinc flashings with standing seams

C-1 Side flashings

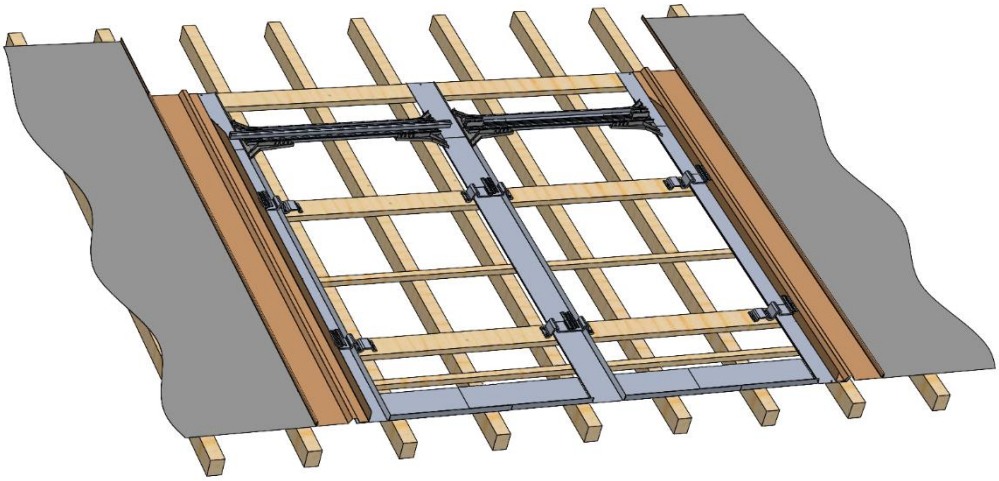

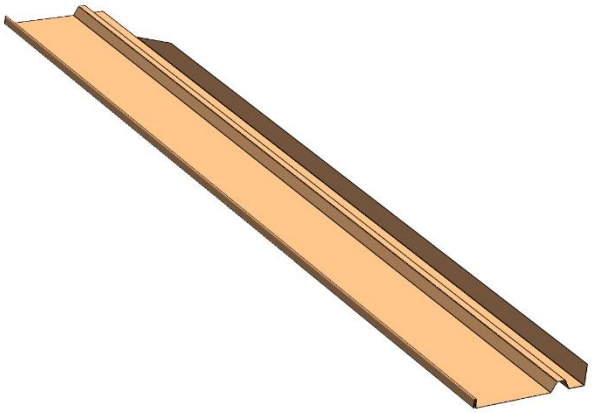

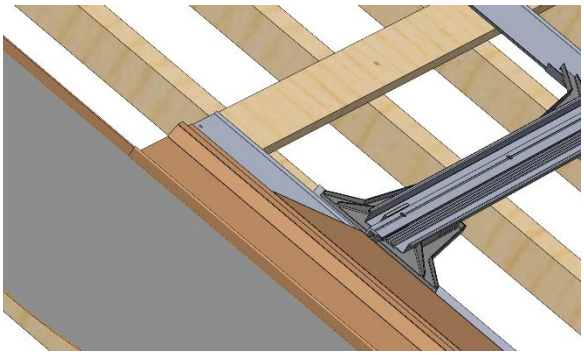

(Top of the PV field)

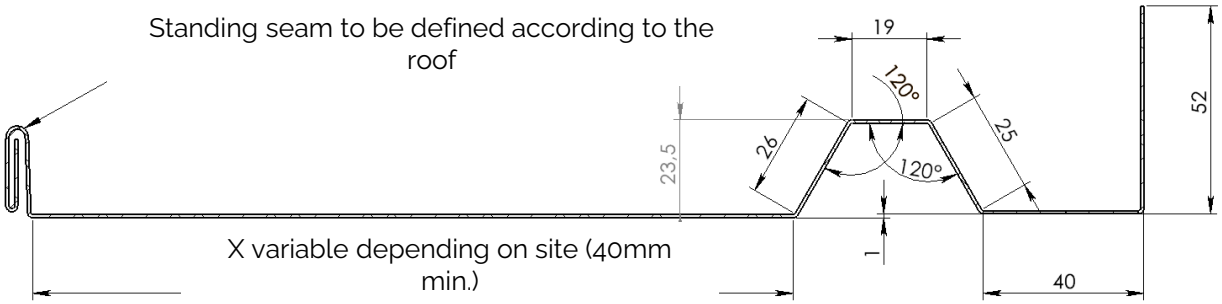

Side flashing (symmetrical right and left flashing)

Appendix 6

Installation in roof covering panel

Example of standard panel:

- Polysol
- Ranger

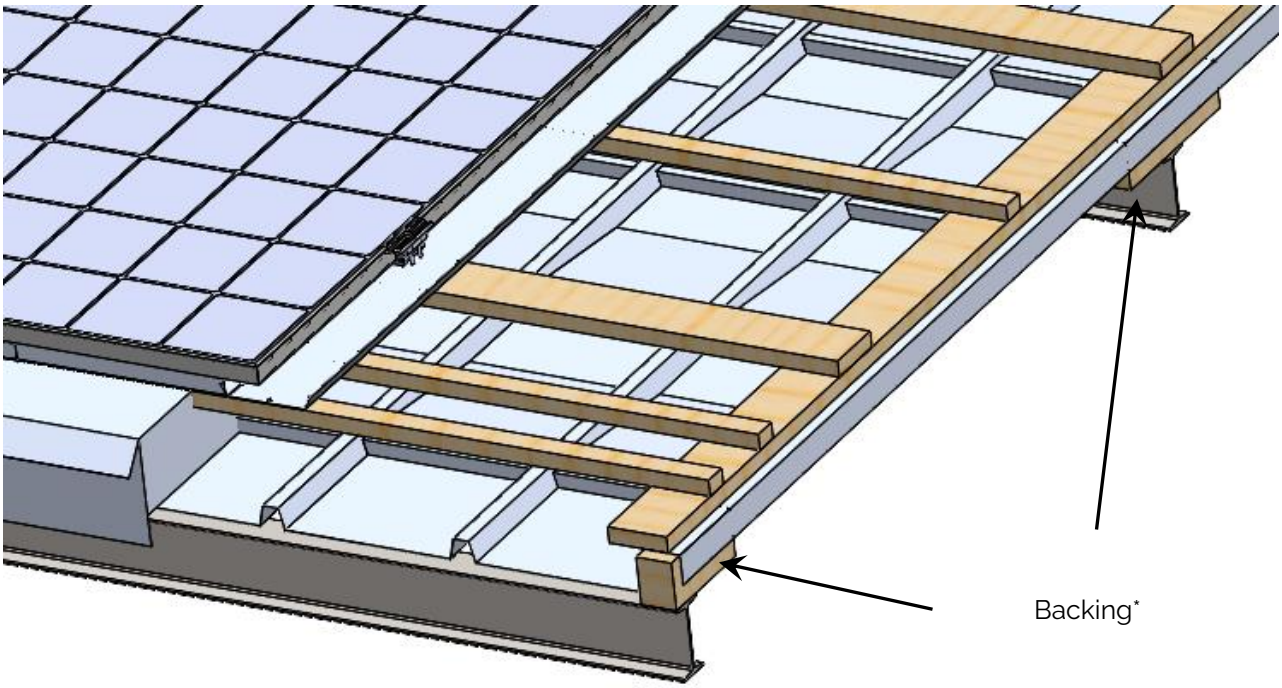

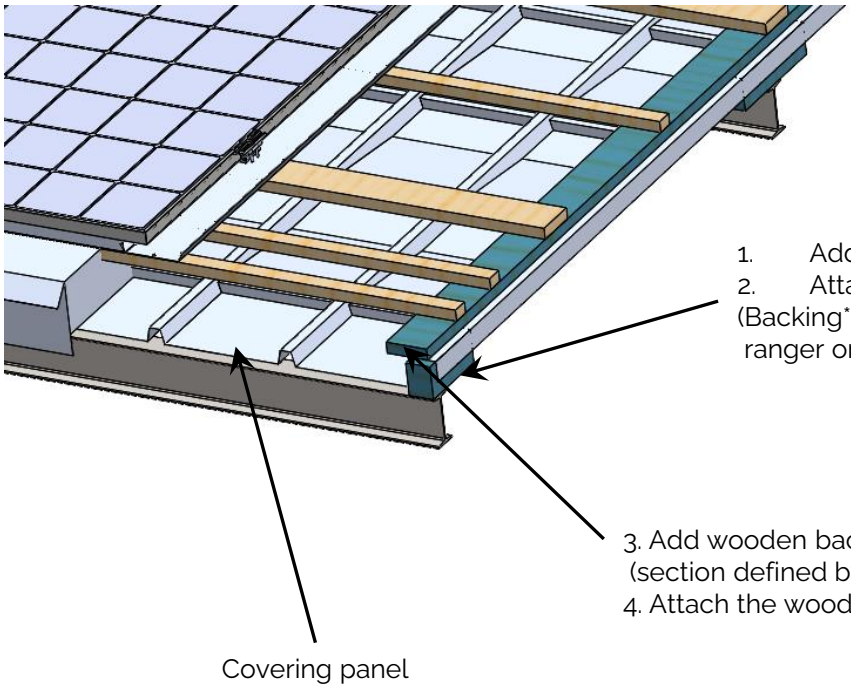

1. Add a backing*
2. Attach everything to the structure

(Backing* thickness based on the ranger or polysol panel)

3. Add wooden backing on the top (section defined by a specific calculation)
4. Attach the wood to the backing structure

(*) aluminium profile or wooden backing

Appendix 7

Pyramidal installation

A/ Installation in “L" left or right

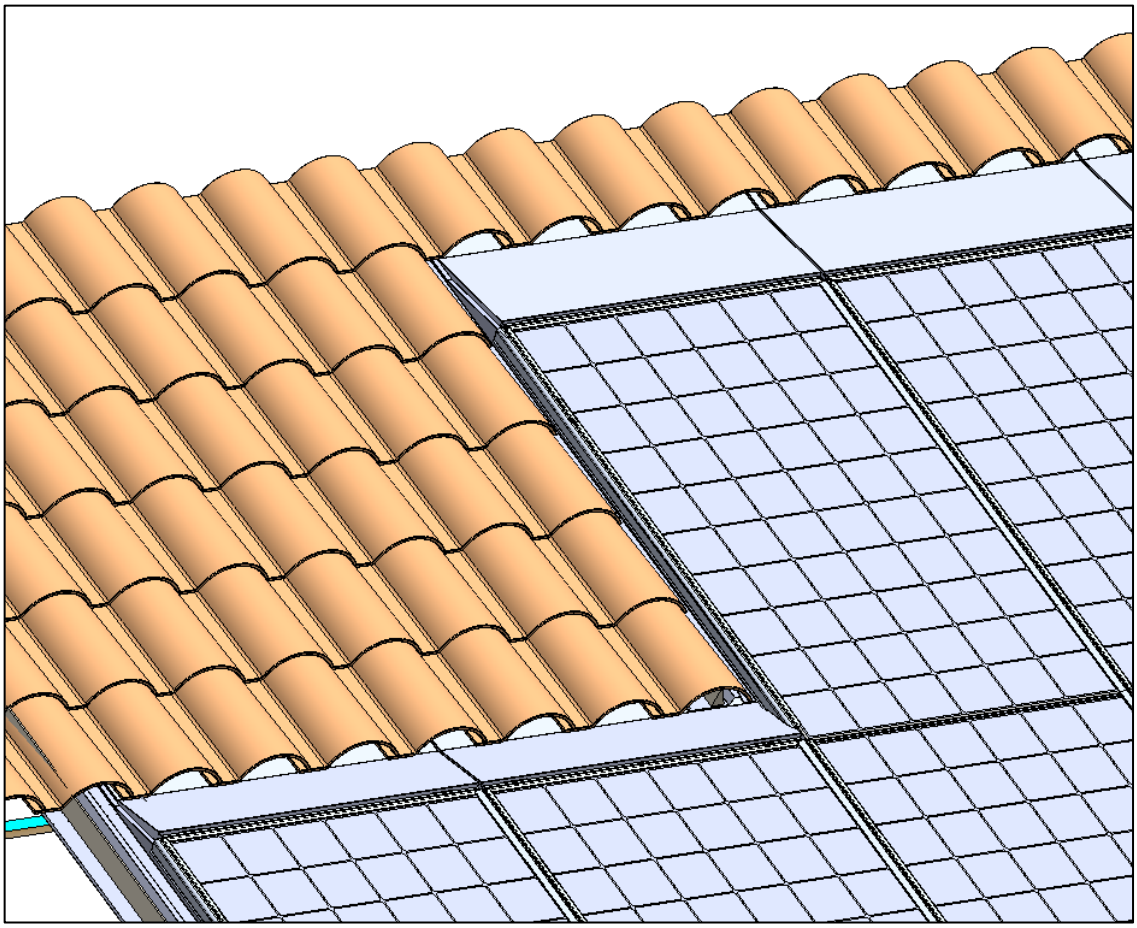

1°) Cut the trays [10]

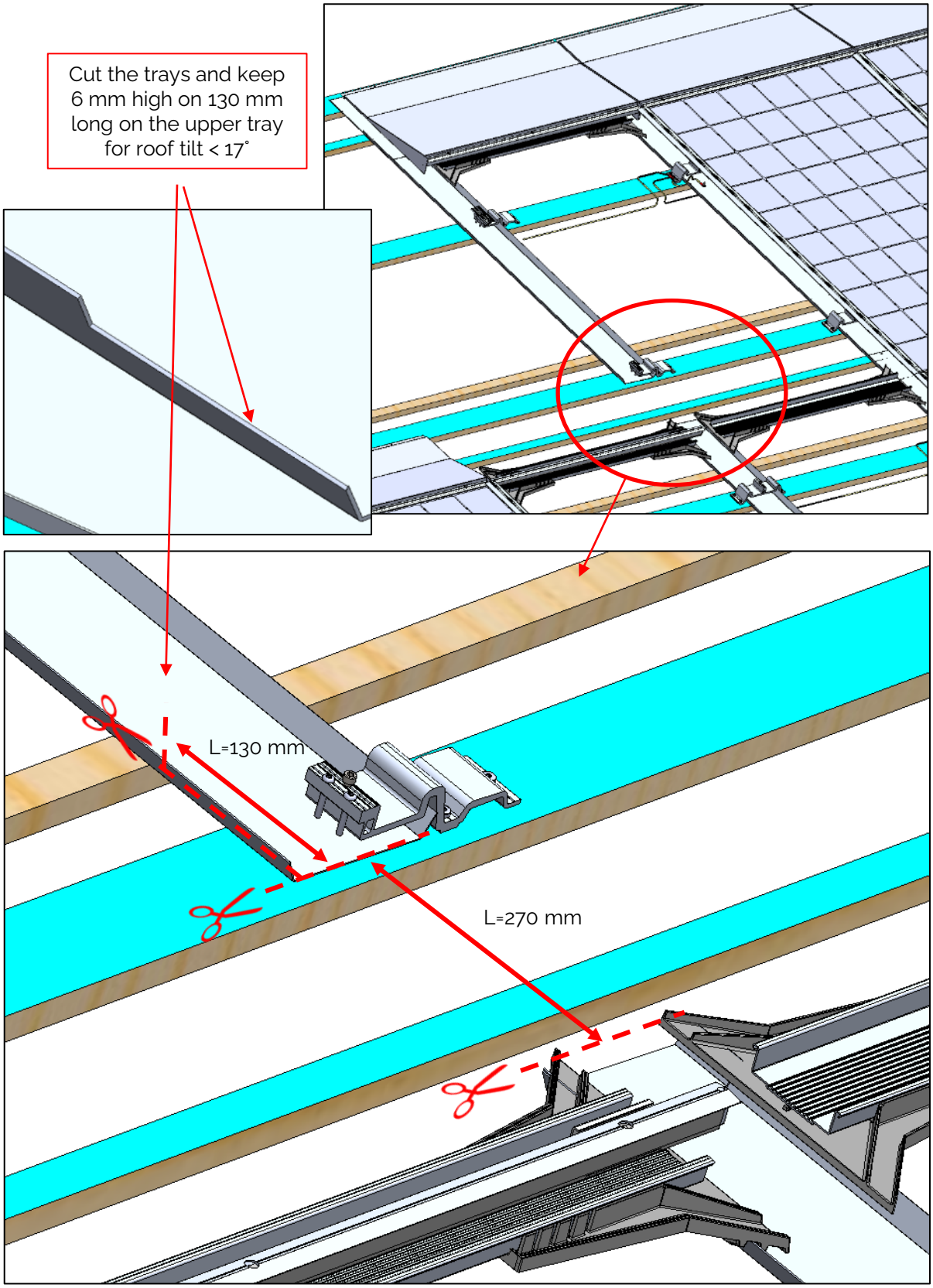

2°) Insert the pyramidal tray [24] and screw the end bracket [2]

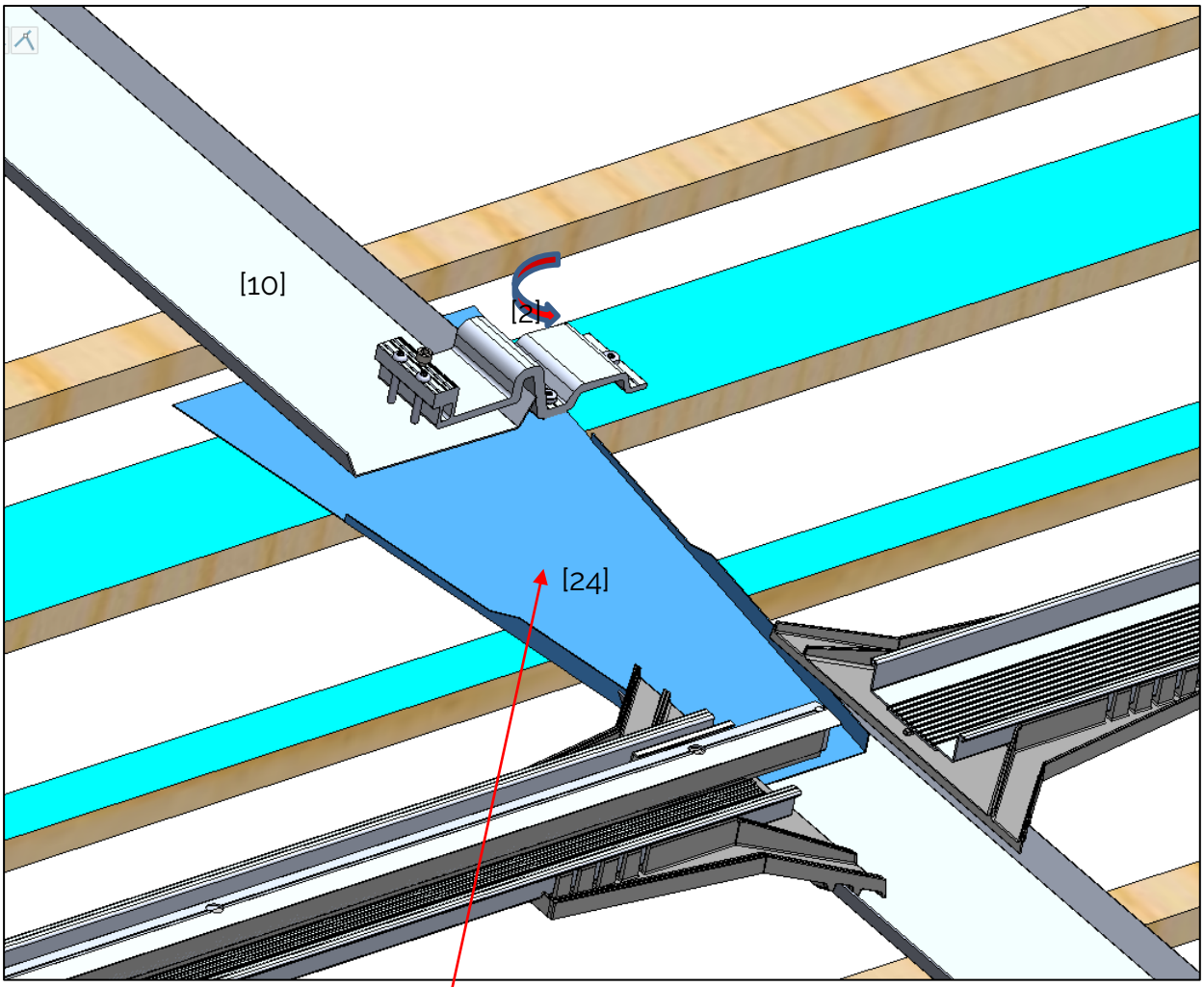

Pyramidal tray [24]

3°) Position the photovoltaic modules

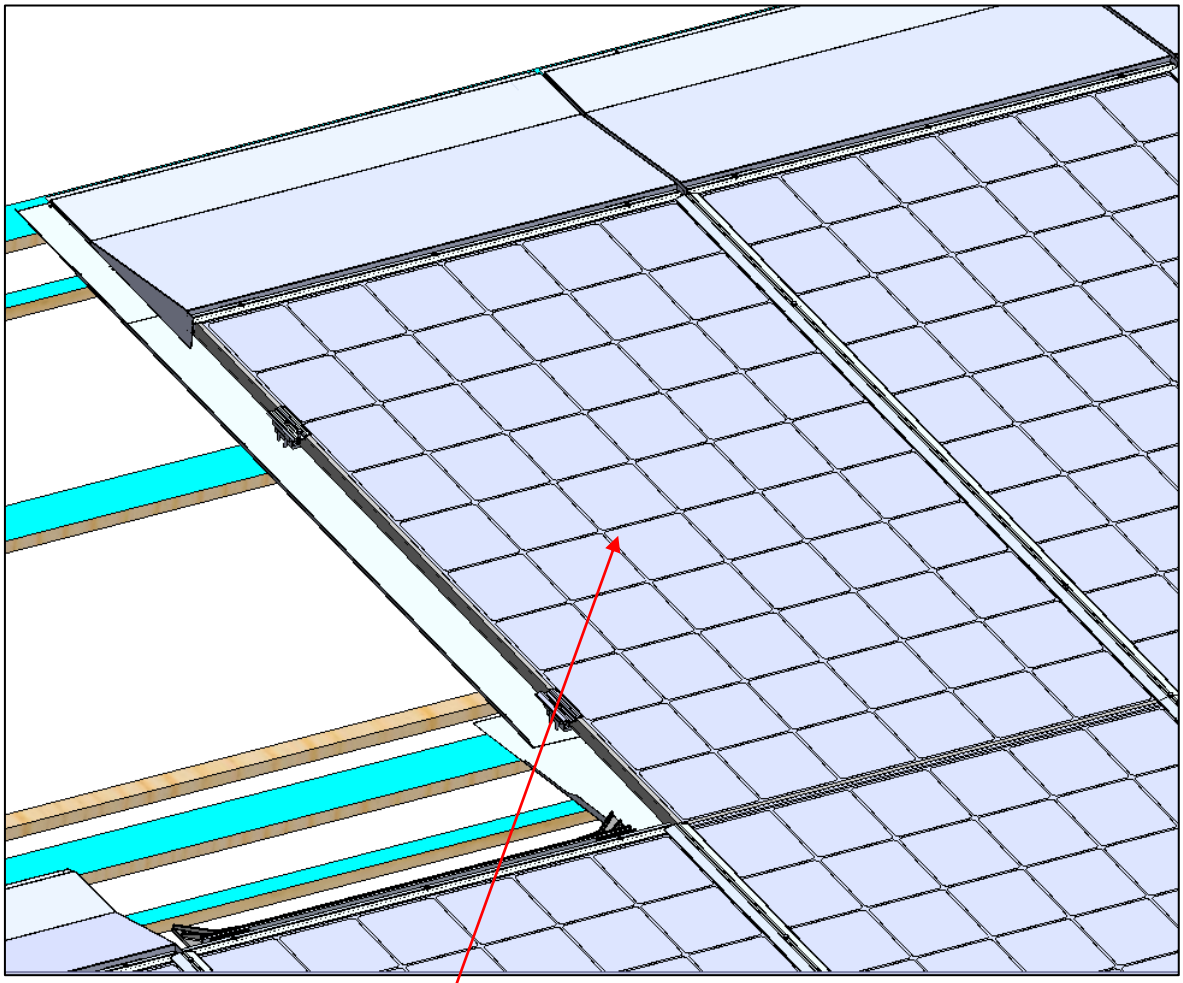

Set up the photovoltaic modules

4°) Cut and position the top flashings [20/21].

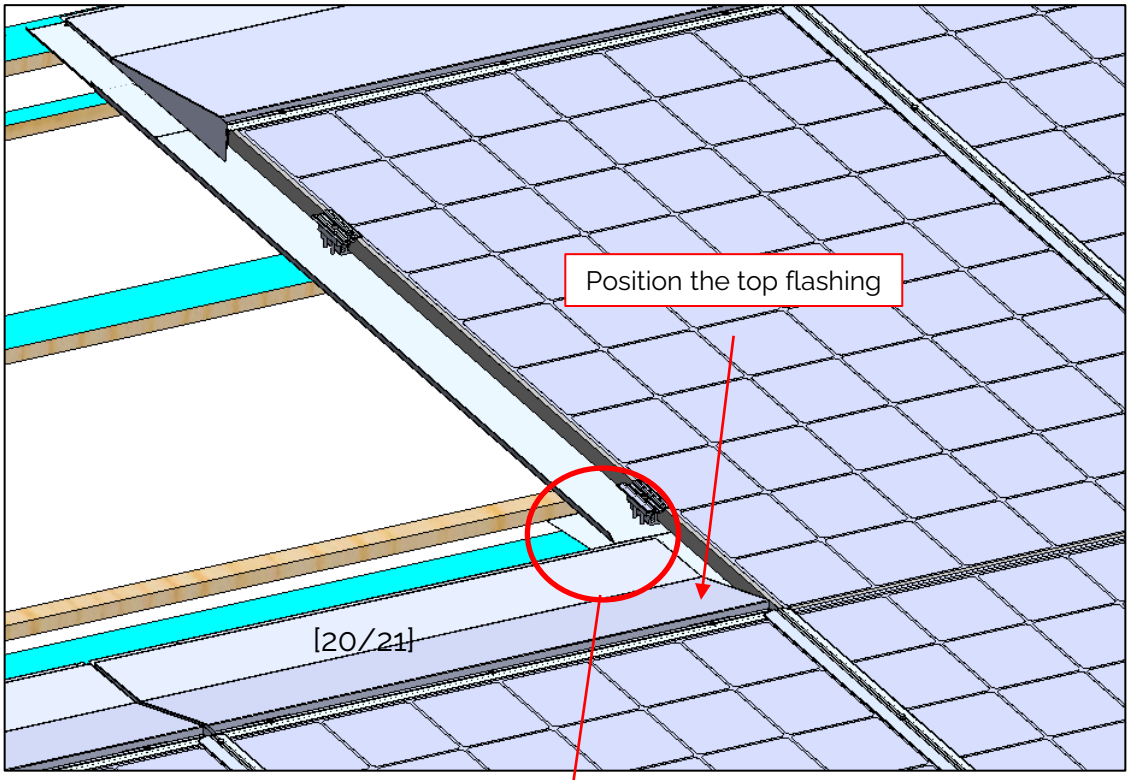

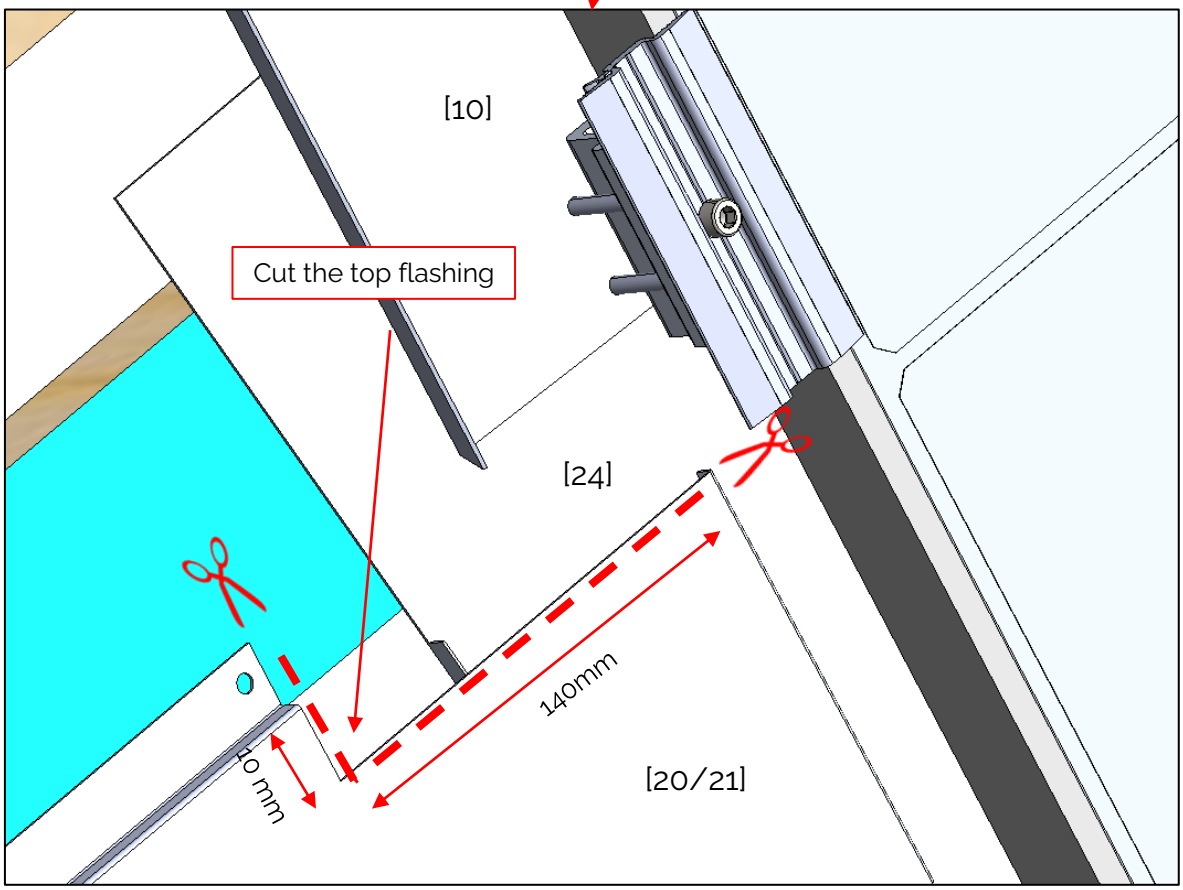

5°) Cut and set the side flashing [13] or [14]

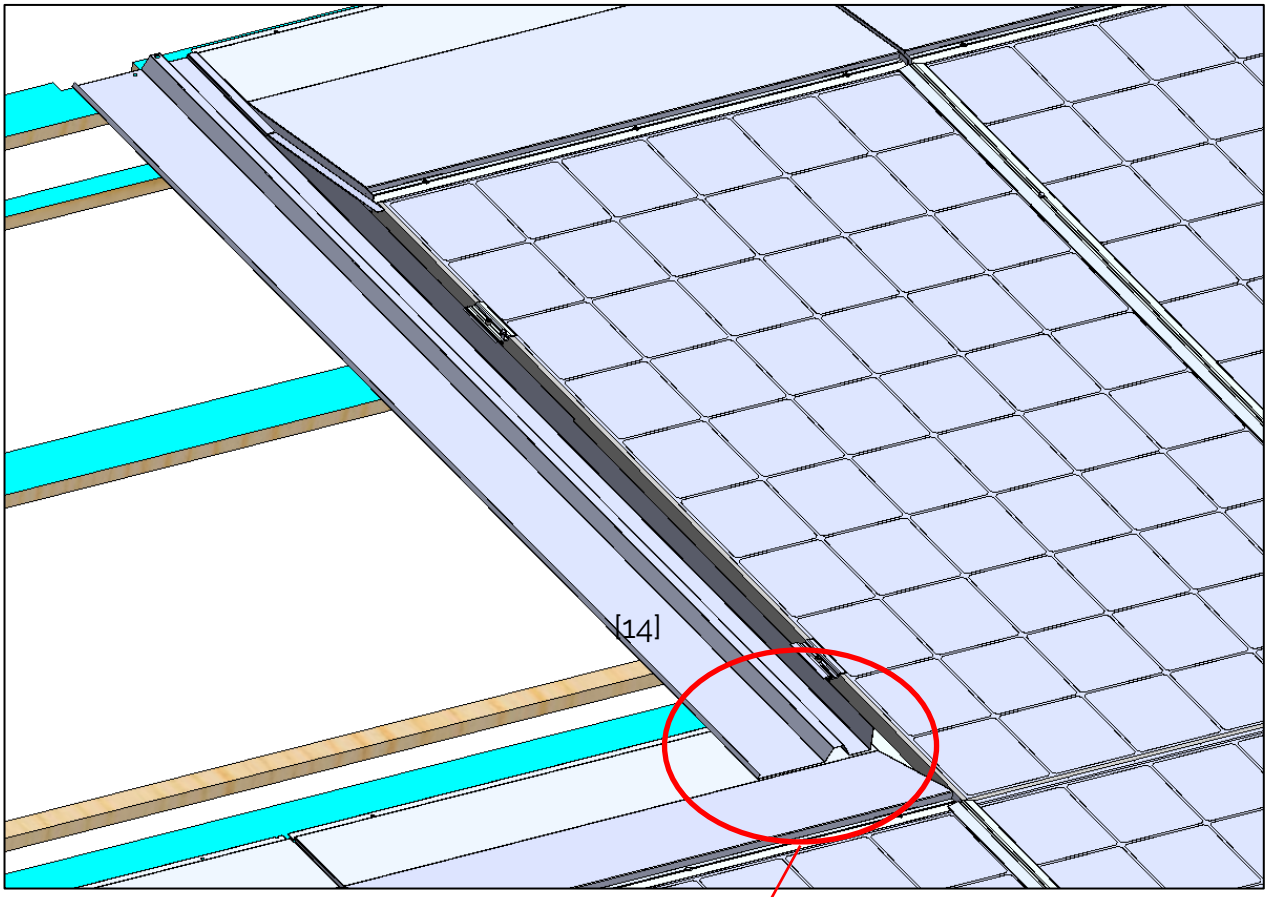

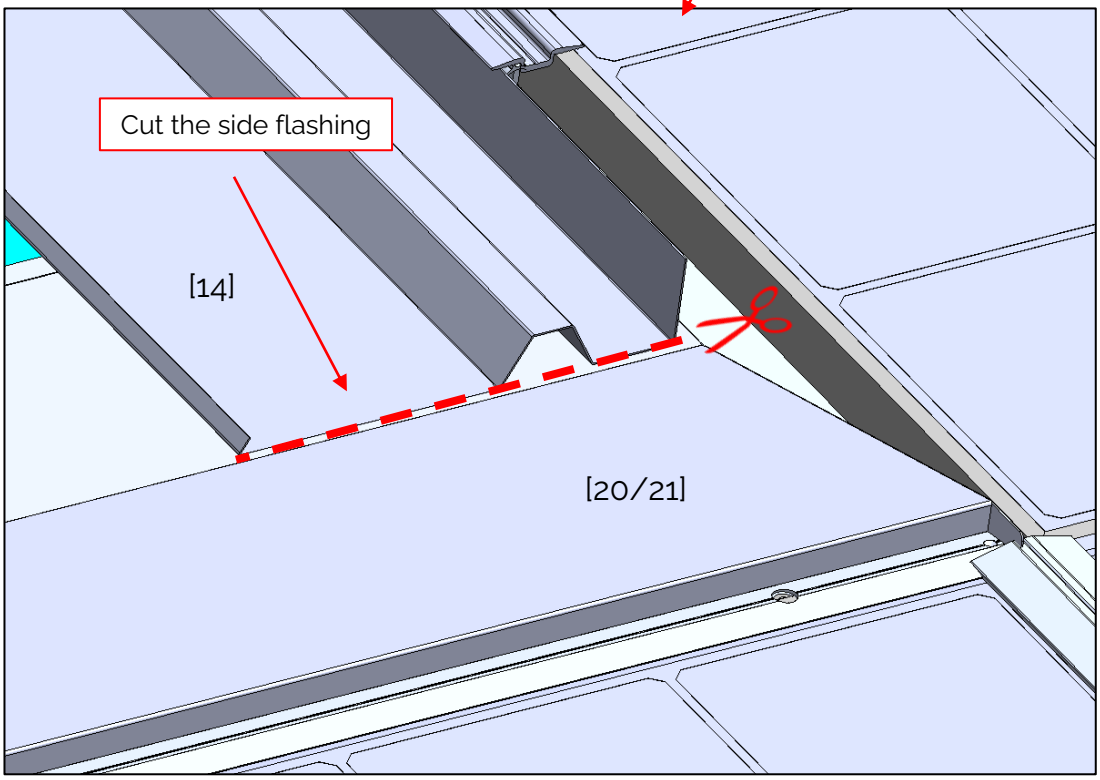

6°) Adjust the end locking bar [8]

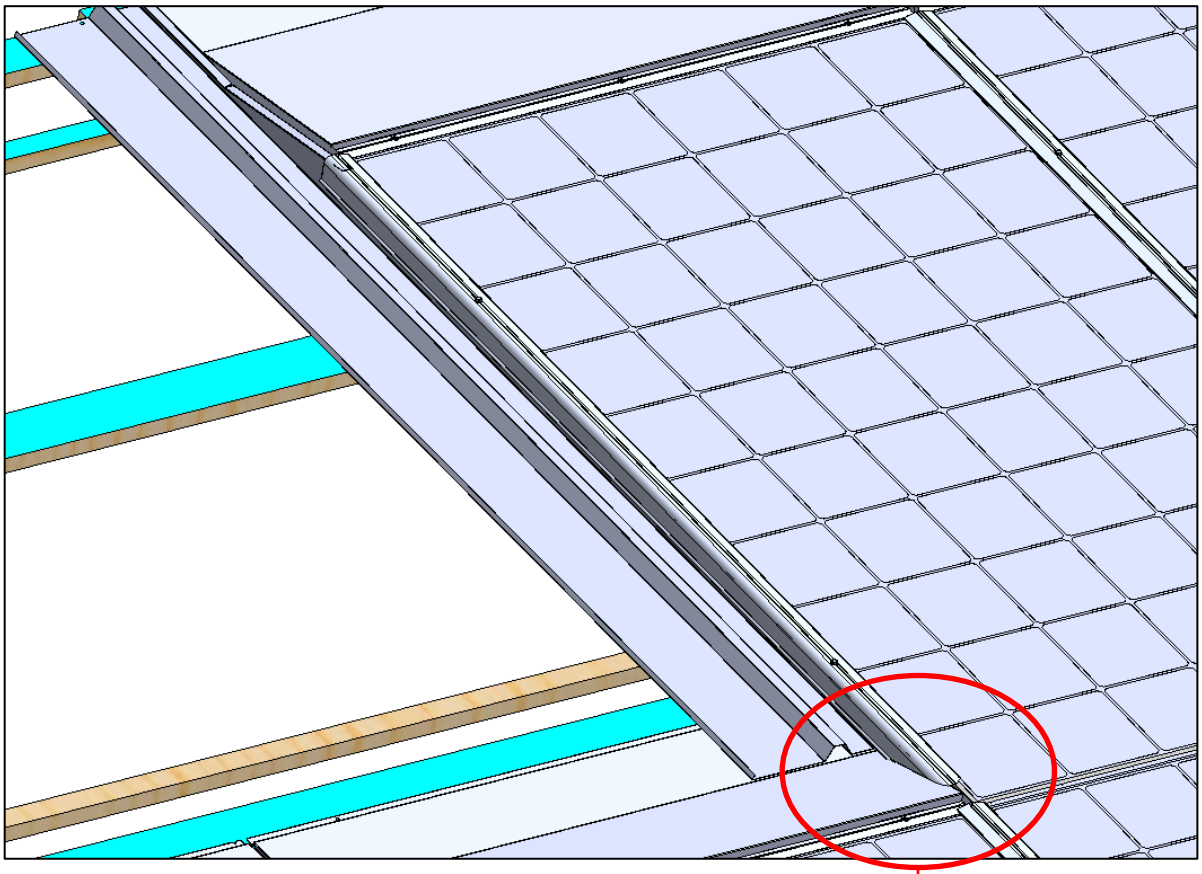

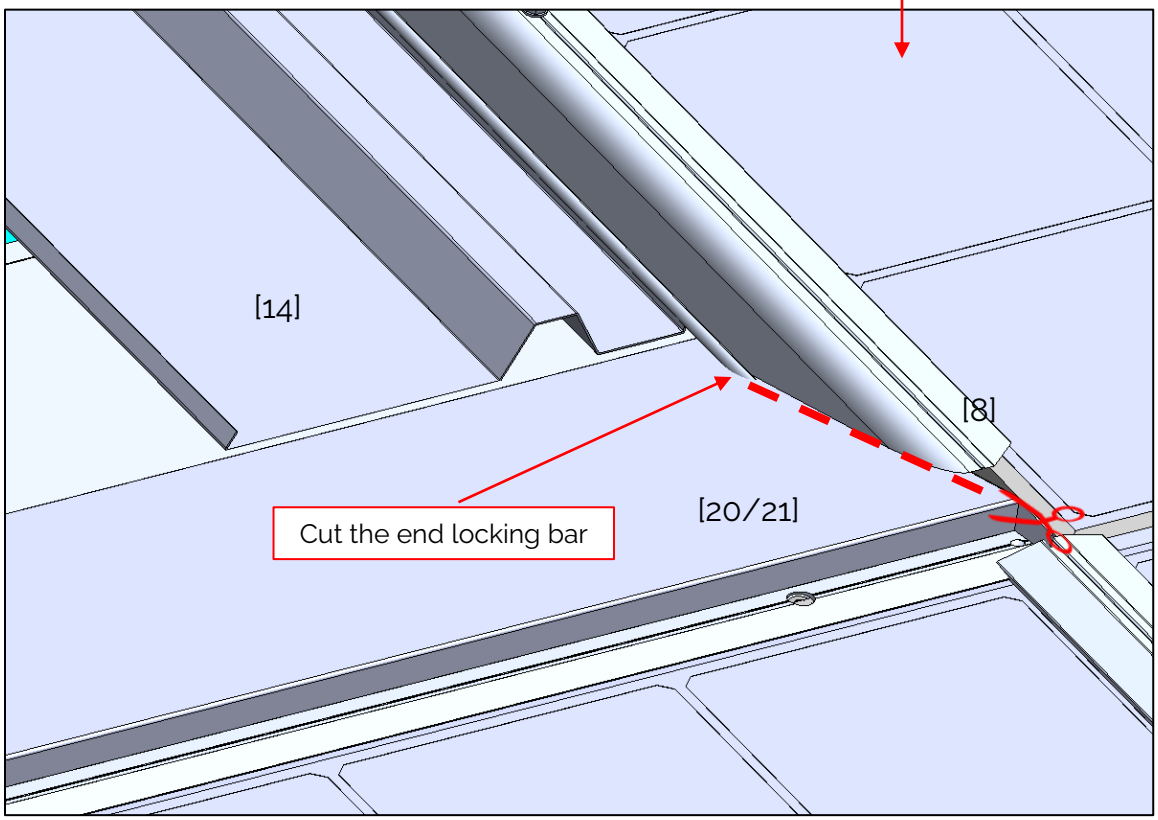

7°) Position the foams

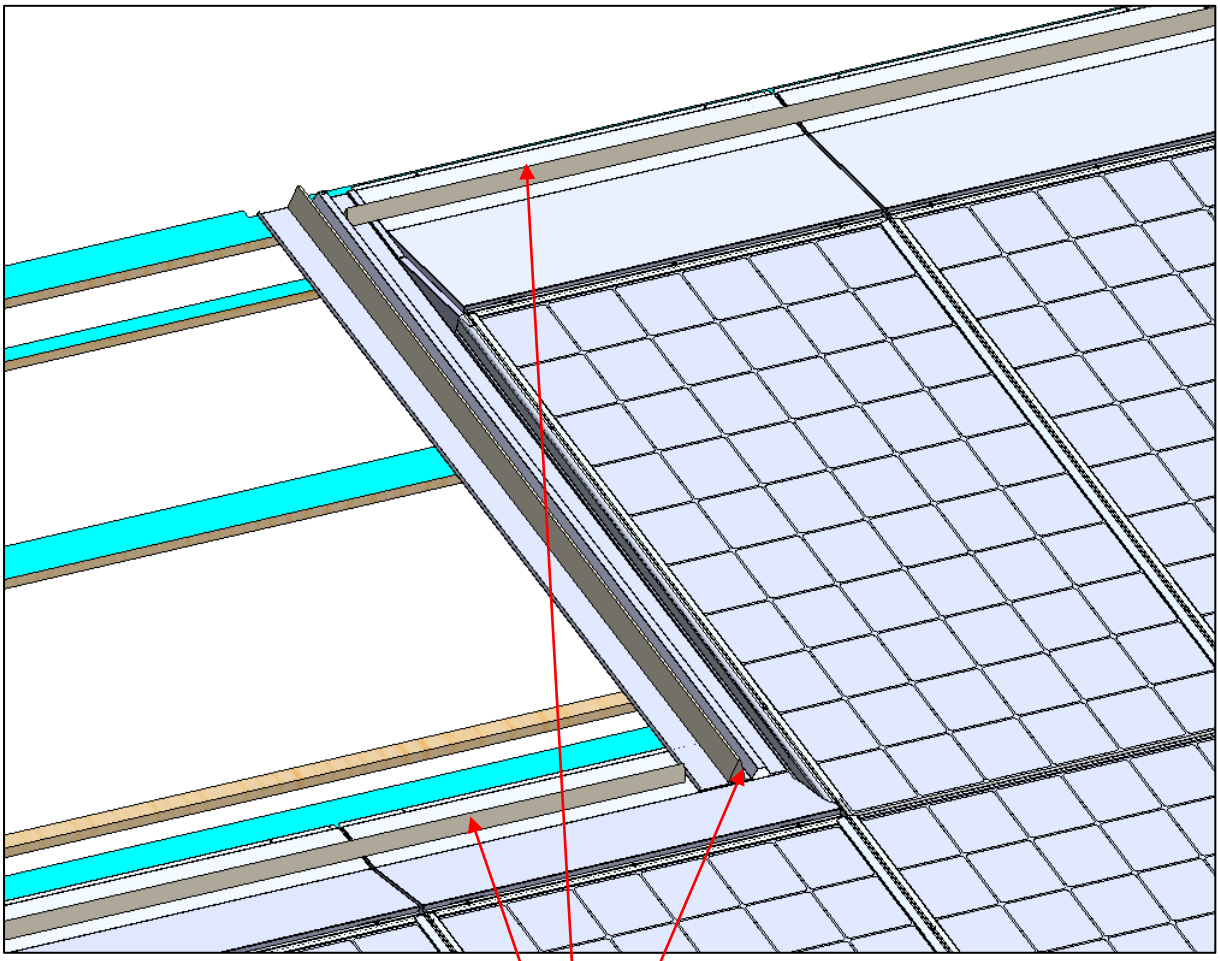

Stick the compression foam

8°) Put the tiles back in place around the PV field.
Cut certain tiles if necessary.

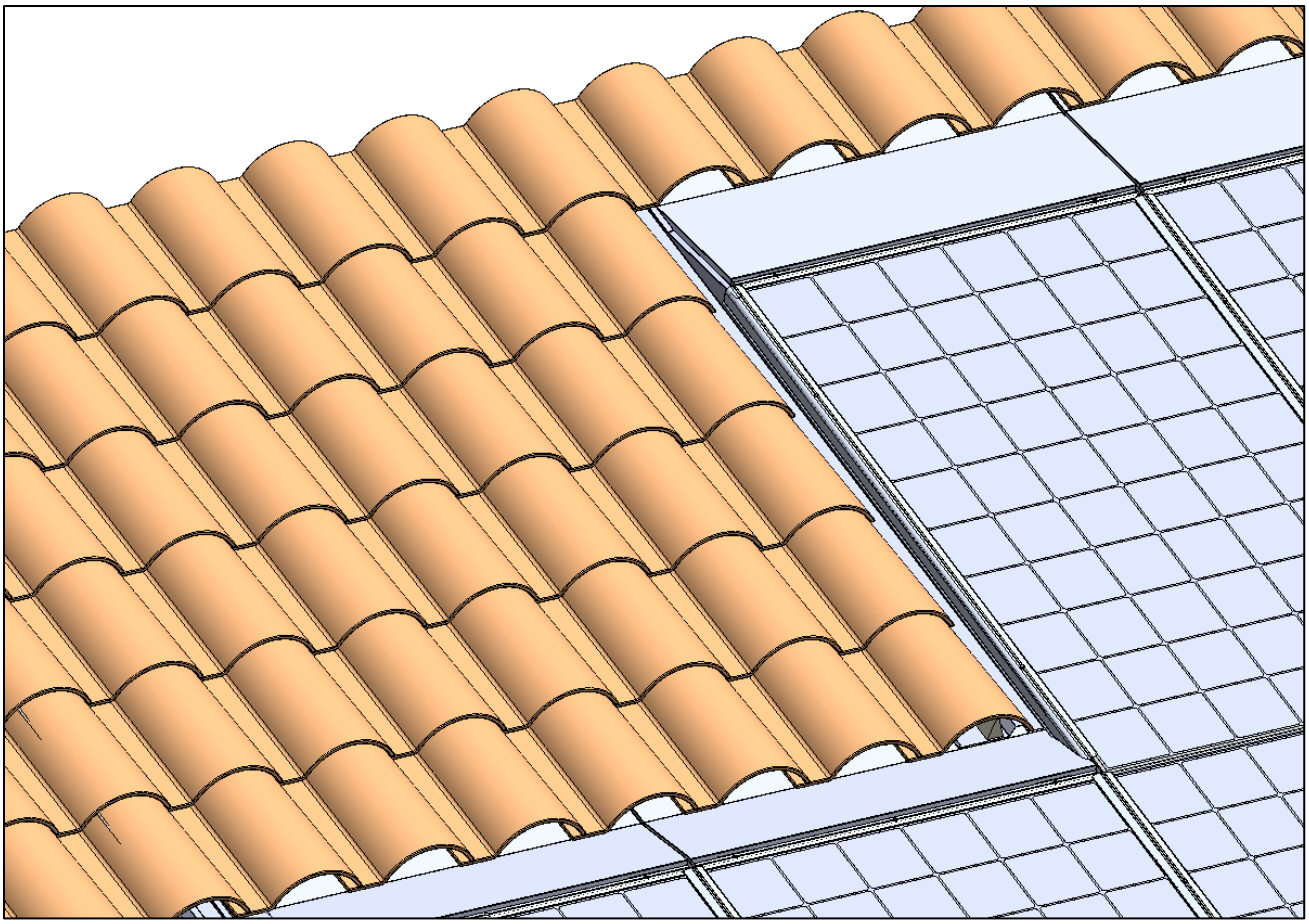

B/ Installation in “T" left or right

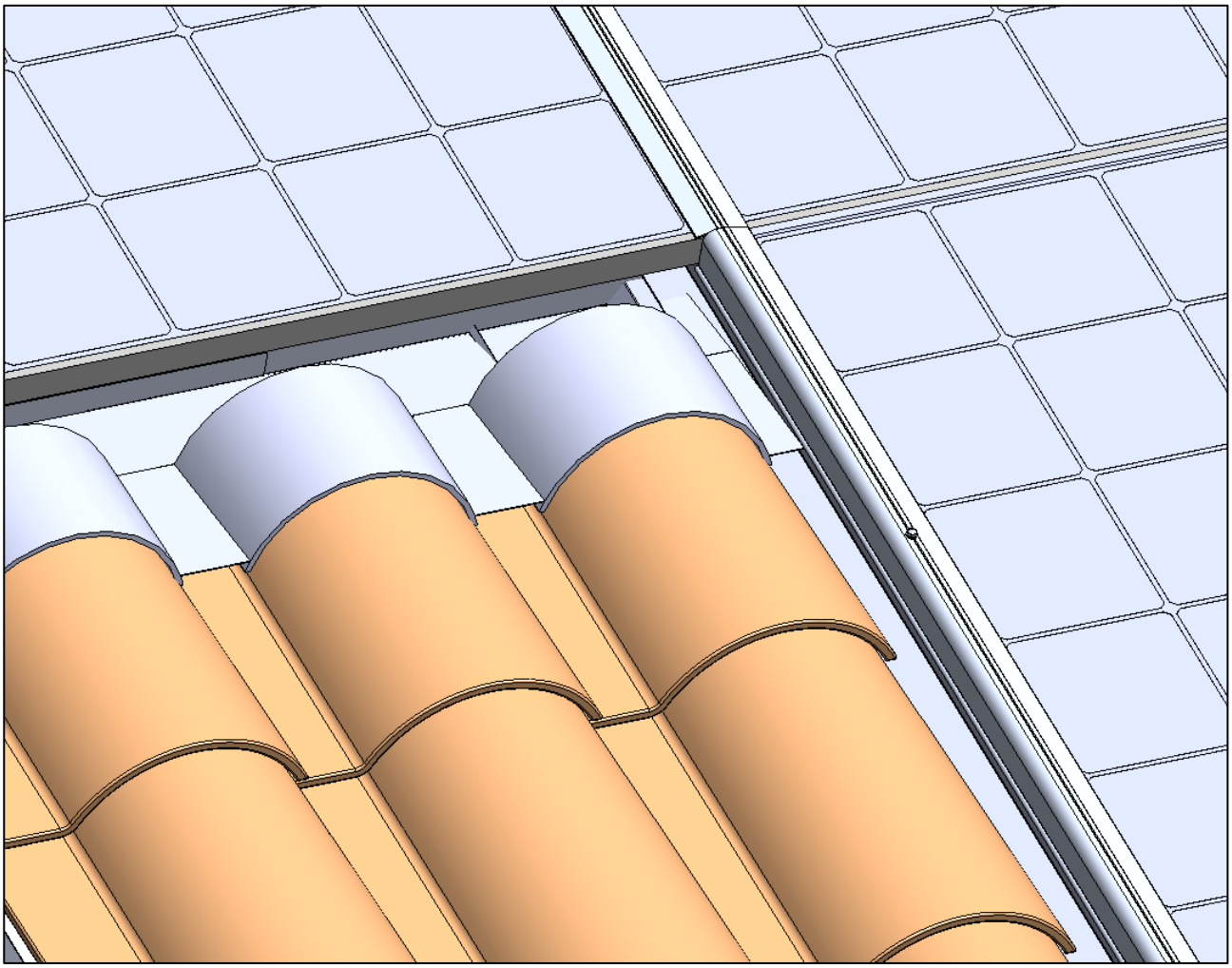

1°) Cut and position the side flashing [13] or [14]

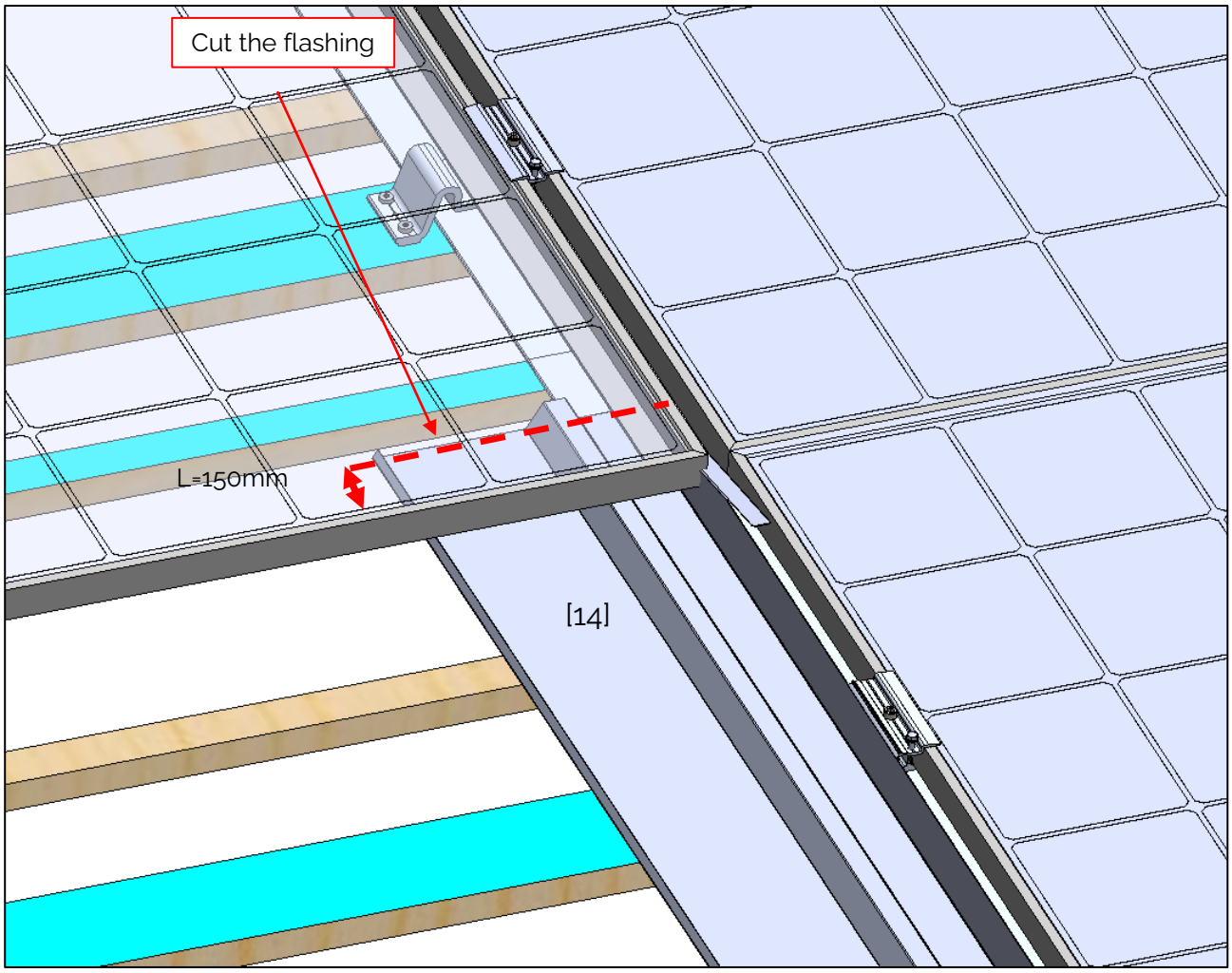

2°) Do the flooring for the bottom flashing

1 batten under the PV module
+ 1 batten to reach the level of the tile

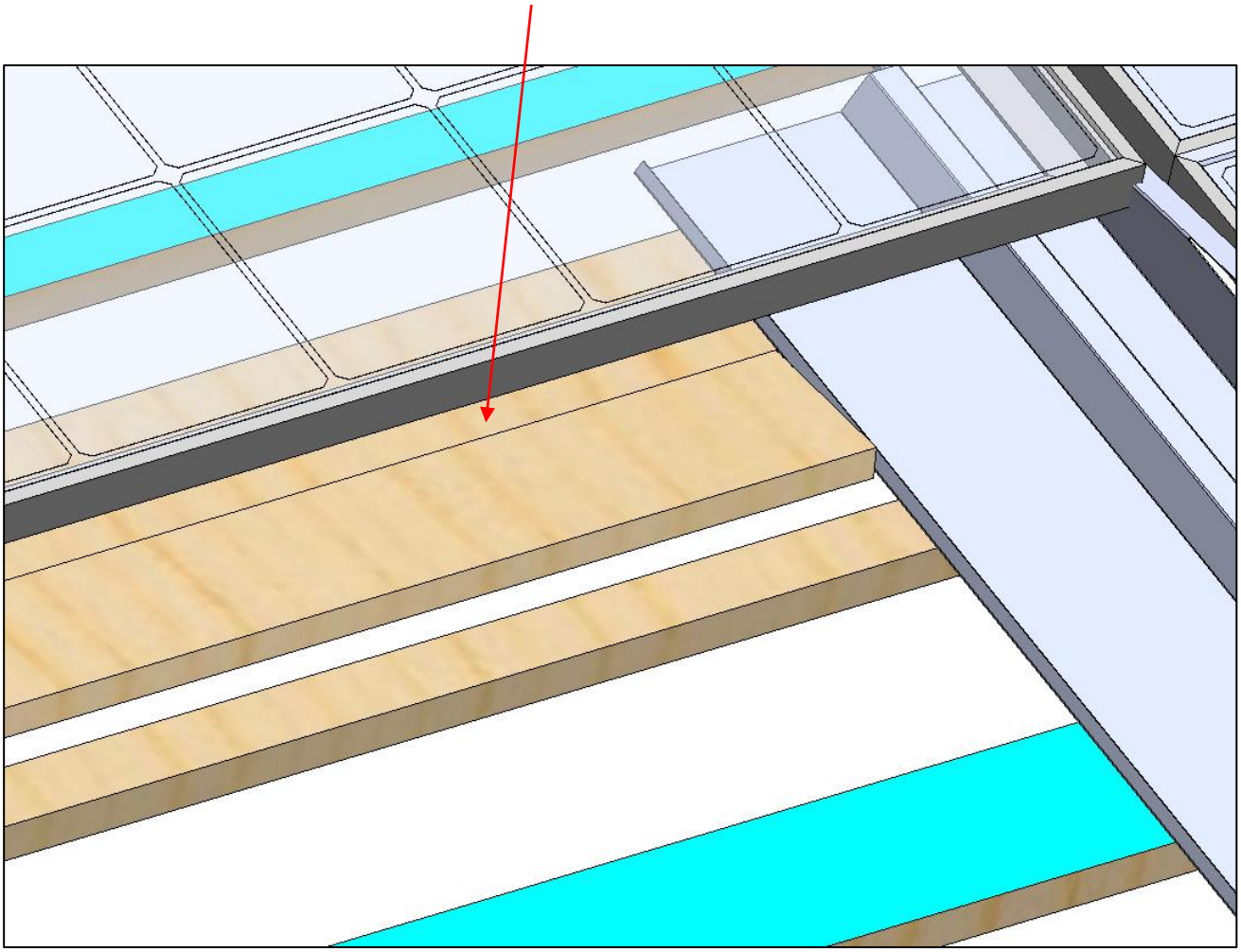

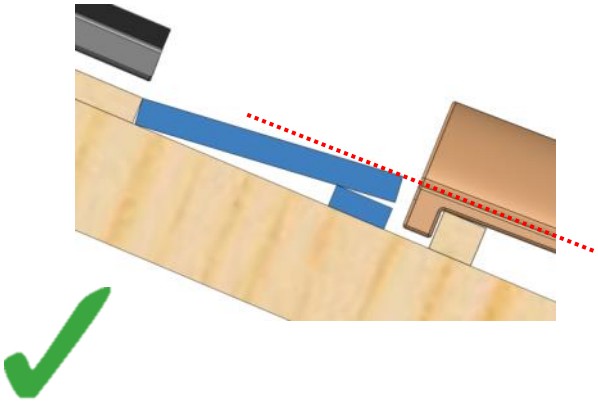

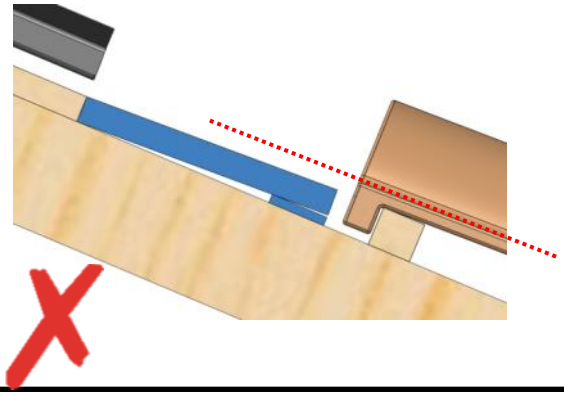

3°) Stick the foam

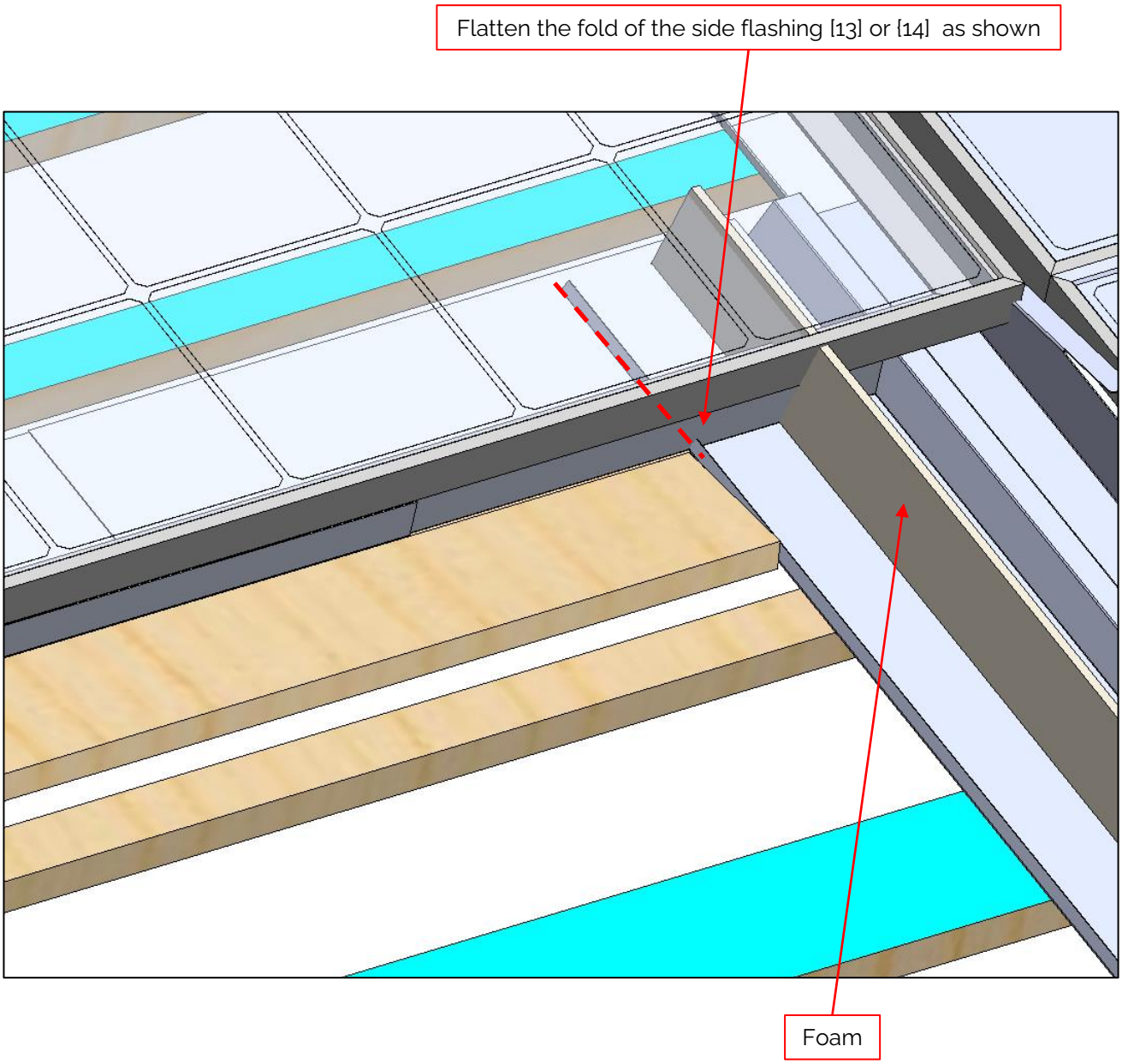

4°) Put back the tiles, stick the bottom flashing and screw the low gates [12]

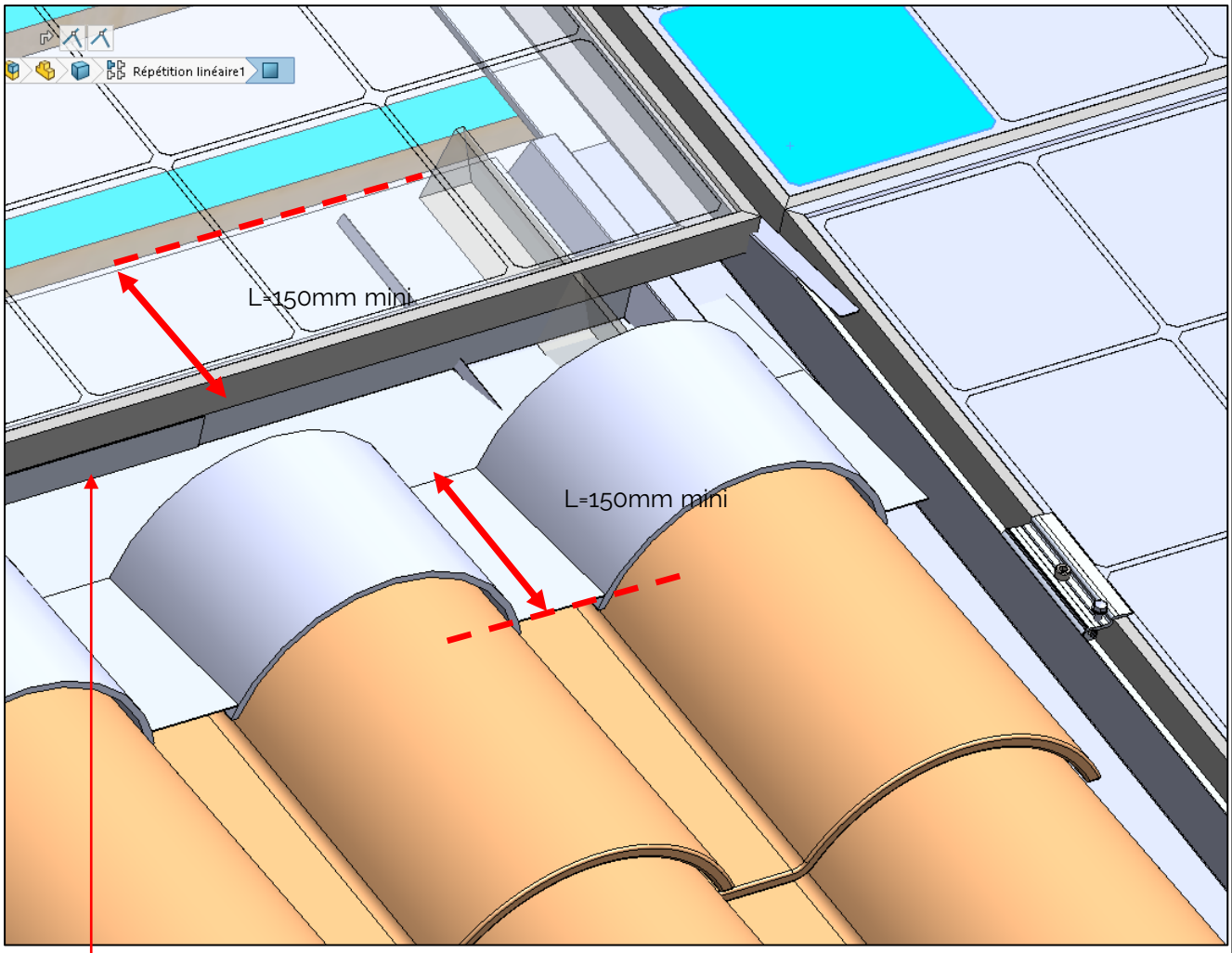

Low gate [12]

Reverse slope FORBIDDEN

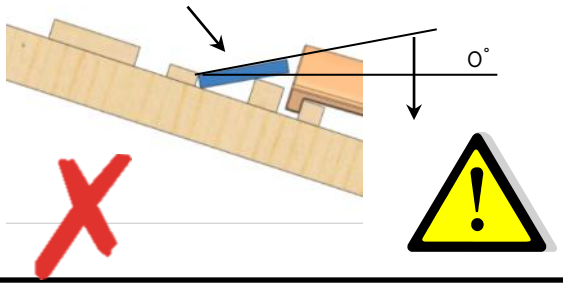

5°) Position and screw the end locking bar [8]

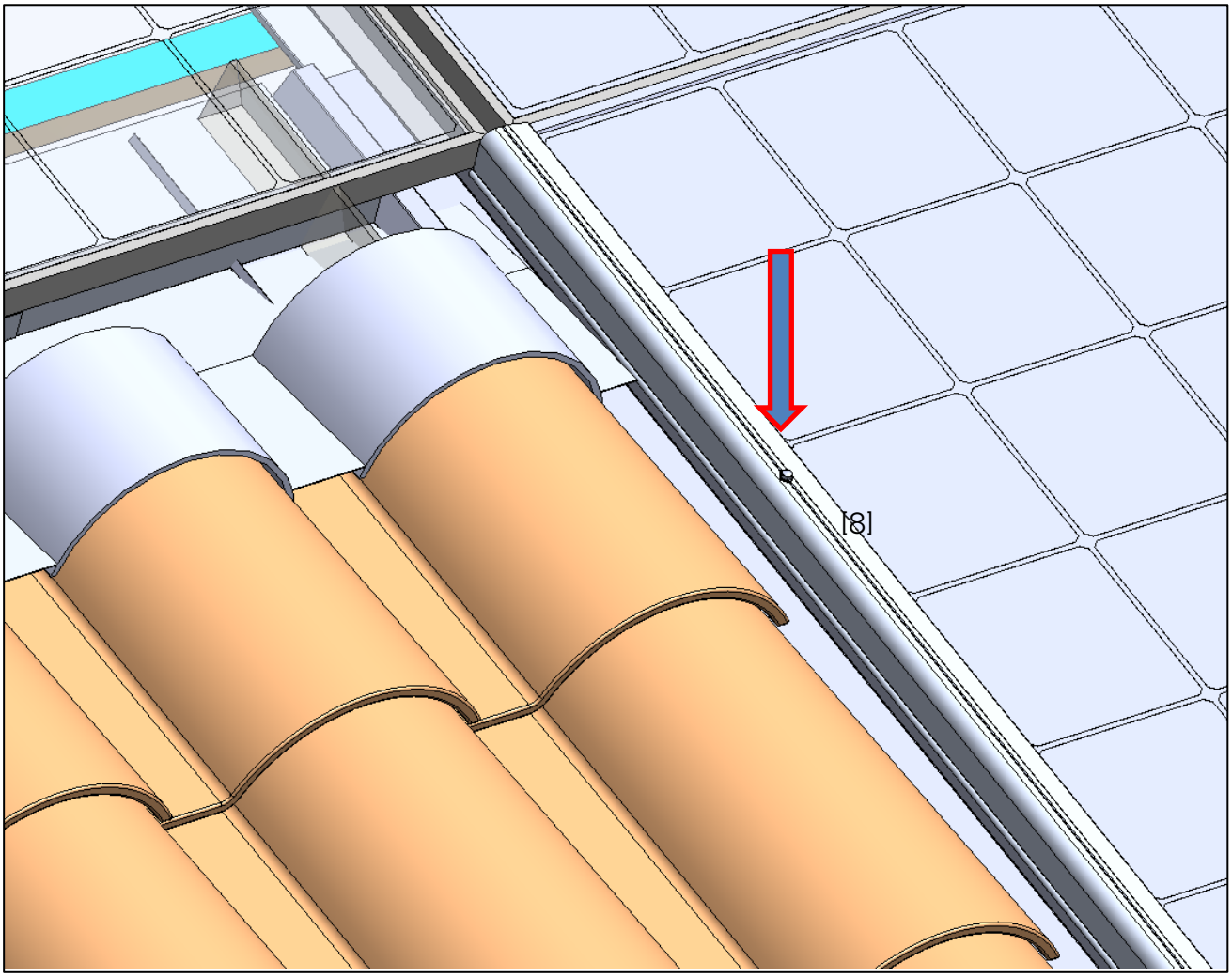

Appendix 8

Only for UK market

Assembly instructions for UK with battens 50 x 25 mm

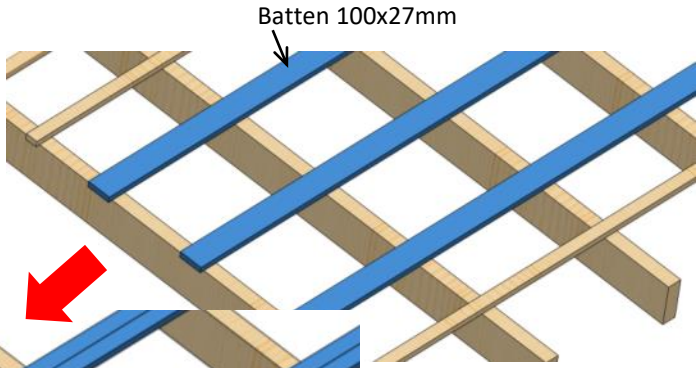

It's possible to substitute one batten 120x27 mm by two juxtaposed battens 50 x 25 mm.

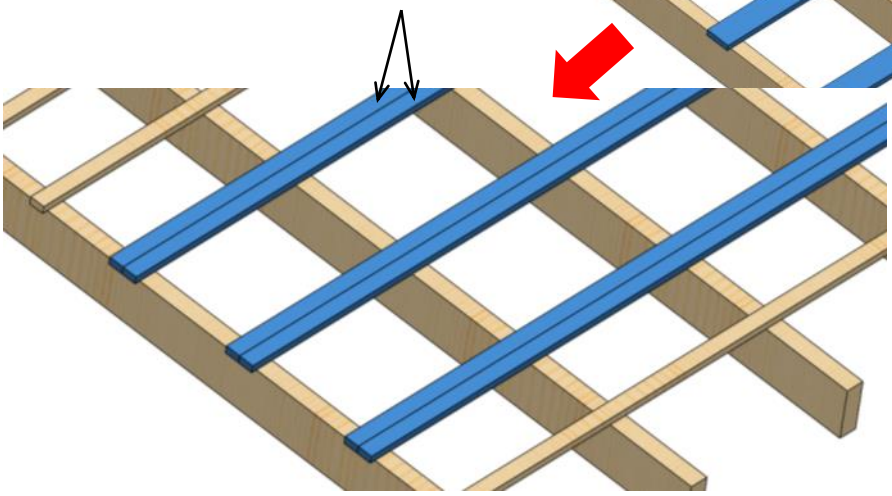

In this case only, at the ends of the field, use the fixing bracket ref. 092513 (4 fixing holes) with 4 Rounded screw 6x40.

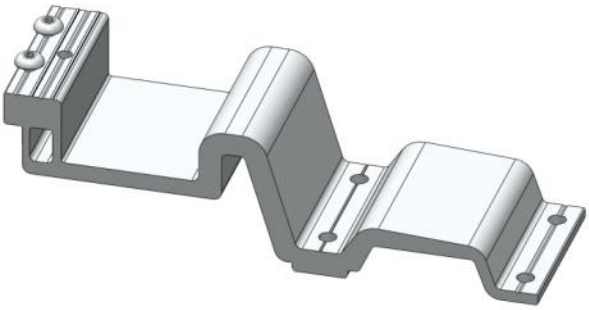

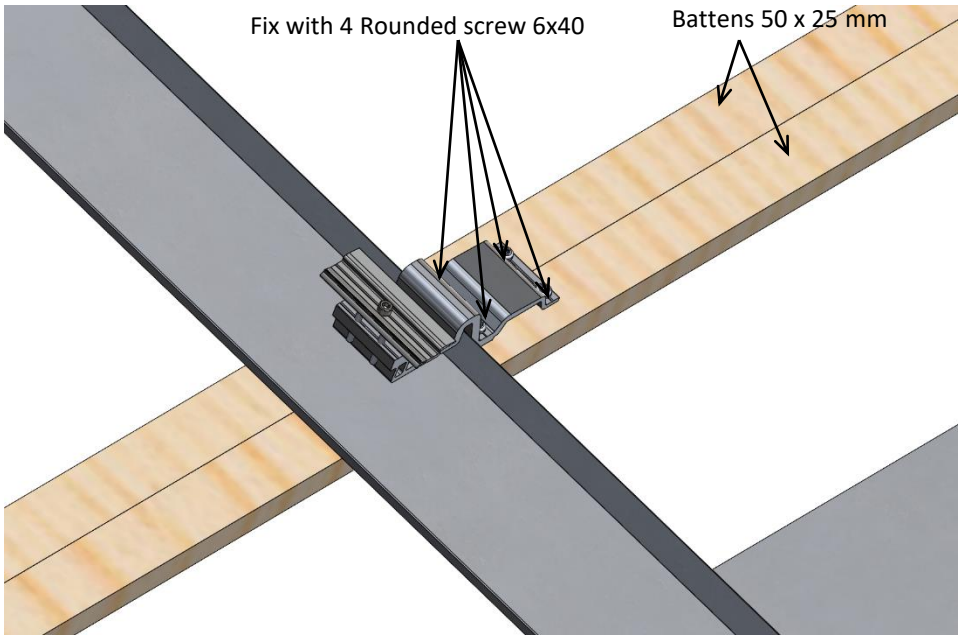

OUR ROOFING SOLUTIONS

edilians.co.uk

EDILIANS
Site industriel
3 Impasse de Chavanne
ZAC de Chavanne
69400 ARNAS - France

Tél : +33 (0)4 74 67 82 88

EDILIANS

Shaping a sustainable future together